Foreword

Thank you for choosing SOURCETRONIC ST130 Series Frequency Inverter. This product made by SOURCETRONIC is based on years of experience in professional production and sale, and designed for variety of industrial machinery, fan and water pump drive unit and IF heavy-duty grinding unit.

This manual provides user the relevant precautions on installation,operational parameter setting, abnormal diagnosis, routine maintenance and safe use. In order to ensure correct installation and operation of the frequency converter, please carefully read this manual before installing it.

For any problem when using this product, please contact your local dealer authorized by this company or directly contact this company, our professionals are happy to serve you.

The end-users should hold this manual,and keep it well for future maintenance & care,and other application occasions. For any problem within the warranty period,please fill out the warranty card and fax it to the our authorized dealer.

The contents of this manual are subject to change without prior notice. To obtain the latest information, please visit our website.

For more product information, please visit: http://www.sourcetronic.com.

SOURCETRONIC

July,2013

Table of Contents

Foreword I

Table of Contents II

Chapter 1 Inspection and Safety Precautions 1
1-1. Inspection after unpacking 1
1-1-1. Instructions on nameplate 1
1-1-2. Model designation 1
1-2. Safety Precautions 2
1-3. Precautions 4
1-4. Scope of applications 7

Chapter 2 Standard Specifications 8
2-1. Technical Specifications 8
2-2. Standard specifications 9
2-3. Dimensions 12
2-3-1. ST130 Series 13
2-3-2. Keyboard size diagram 15

Chapter 3 Keyboard 16
3-1. Keyboarddescription 16
3-2. Keyboard Indicators 16
3-3. Description of operation panel keys 17
3-4. Examples of parameter settings 17
3-4-1. Password Settings 19
3-4-2. Motor parameter auto tunning 19

Chapter 4 Commissioning 21

Chapter 5 Function parameter 22
5-1. Menu grouping 22
5-1-1. d0 Group - Monitoring function 23
5-1-2. F0 Group - Basic function 25
5-1-3. F1 Group - Input terminals 27
5-1-4. F2 Group - Output terminals 29

5-1-5. F3 Group - Start and stop control 30
5-1-6. F4 Group - V/F control 31
5-1-7. F5 Group - Vector control group 32
5-1-8. F6 Group - Keyboard and display 32
5-1-9. F7 Group - Auxiliary function 34
5-1-10. F8 Group - Fault and protection 35
5-1-11. F9 Group - Communication parameter 36
5-1-12. FA Group - Torque control 38
5-1-13. Fb Group - Control optimization 38
5-1-14. E0 Group - Wobbulate control 39
5-1-15. E1 Group - Multi-speed control 39
5-1-16. E2 Group - STD control 40
5-1-17. E3 Group - Virtual DI, Virtual DO 41
5-1-18. b0 Group - Motor parameters 43
5-1-19. y0 Group - Function code management 44
5-1-20. y1 Group - Fault history search 44
5-2. Function parameter description 46
5-2-1. dO Group - Monitoring function group 46
5-2-2. F0 Group - Basic function group 47
5-2-3. F1 Gruop - Input terminals group 53
5-2-4. F2 Group - Output terminals group 57
5-2-5. F3 Group - Start and stop control group 60
5-2-6. F4 Group - V/F control group 61
5-2-7. F5 Group - Vector control group 64
5-2-8. F6 Group - Keyboard and display group 65
5-2-9. F7 Group - Auxiliary function group 67
5-2-10. F8 Group - Fault and protection group 70
5-2-11. F9 Group - Communication parameter group 73
5-2-12. FA Group - Torque control group 75
5-2-13. Fb Group - Control optimization group 76

5-2-14. E0 Group - Wobbulate control group 77

5-2-15. E1 Group - Multi-speed control group 78

5-2-16. E2 Group - STD control group.....80

5-2-17. E3 Group - Virtual DI, virtual DO group 83

5-2-18. b0 Group - Motor parameter group 87

5-2-19. y0 Group - Function code management 88

5-2-20. y1 Group - Fault history search group 89

Chapter 6 EMC (Electromagnetic Compatibility).....91

6-1. Definition.....91

6-2. EMC Standard.....91

6-3. EMC Directive.....91

6-3-1. Harmonic Effect.....91

6-3-2. Electromagnetic Interference and Installation Precautions 92

6-3-3. Remedies for the interferences from the surrounding electromagnetic equipments to the inverter:.....92

6-3-4. Remedies for the interferences from the inverter to the surrounding electromagnetic equipments: 92

6-3-5. Remedies for leakage current.....93

6-3-6. Precautions on Installing EMC input filter at the input end of power supply.....94

Chapter 7 Troubleshooting.....95

7-1. Fault message and troubleshooting 95

Chapter 8 Installation and Spare Circuit 98

8-1. Operating environment 98

8-2. Installation Direction andSpace 98

8-3. Wiring diagram 98

8-4. Main circuit terminal.....100

8-4-1. ST130 main circuit terminal 100

8-4-2. Function Description of Terminals.....100

8-5. Control circuit terminals 100

8-5-1. Description of control circuit terminals.....100

8-5-2. Arrangement of control circuit terminals 101

8-6. Wiring Precautions: 102

8-7. Spare Circuit..... 102

Chapter 9 Maintenance and Repair..... 104
9-1. Inspection and Maintenance 104

9-2. Parts for regular replacement..... 105

9-3. Storage..... 105

9-4. Measuring and readings..... 106

Chapter 10 Warranty..... 107

Appendix I RS485 Communication Protocol 109
I-1. Introduction..... 109

I-2. Details 109

Warranty Card ..... - 119 -

Chapter 1 Inspection and Safety Precautions

SOURCETRONIC frequency inverters have been tested and inspected before leaving factory. After purchasing, please check if its package is damaged due to careless transportation, and if the specifications and model of the product are consistent with your order requirements. For any problem, please contact your local authorized SOURCETRONIC dealer or directly contact this company.

1-1.Inspection after unpacking

※ Check if that packing container contains this unit, one manual and one warranty card.

※ Check the nameplate on the side of the frequency inverter to ensure that the product you have received is the right one you ordered.

1-1-1.Instructions on nameplate

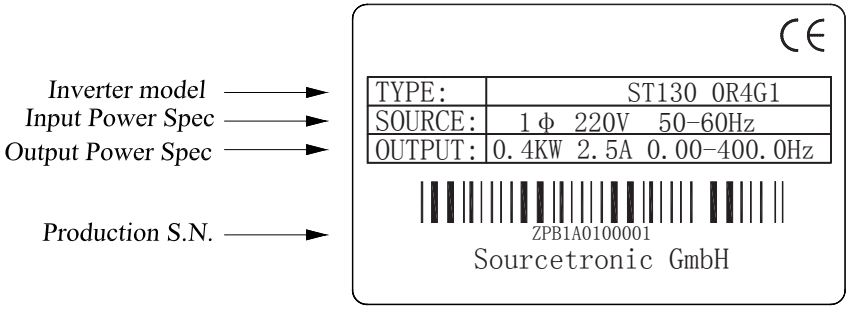

1-1-2.Model designation

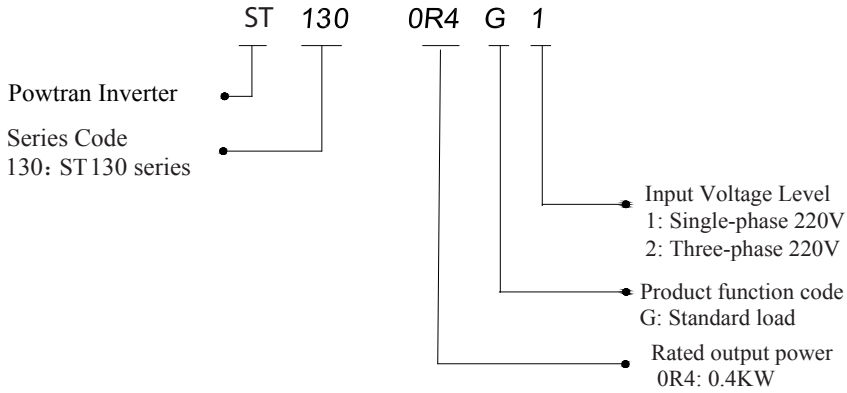

1-2.Safety Precautions

Safety precautions in this manual are divided into the following two categories:

Danger: the dangers caused by failure to perform required operation, may result in serious body injury or even death;

Caution:the dangers caused by failure to perform required operation,may result in moderate injury or minor injury, and equipment damage;

Process	Type	Explanation
Before installation	Danger	★ When unpacking, if control system with water, parts missed or component damaged are found, do not install! ★ If packing list does not match the real name, do not install! ★ Gently carry with care,otherwise there is the risk of damage to equipment! ★ Please do not use the damaged driver or the frequency inverter with missed pieces,otherwise there is the risk of injury! ★ Do not use your hand to touch the control system components, otherwise there is the risk of electrostatic damage!
When installing	Danger	★ Please install the unit on the metal or flame retardant objects; away from combustible material. Failure to do so may cause a fire! ★ Never twist the mounting bolts of the equipment components, especially the bolt with the red mark!
	Note	★ Do not let the lead wires or screws fall into the driver. Otherwise which may cause damage to the driver! ★ Keep the driver installed in the place where less vibration, avoid direct sunlight. ★ When two or more converters are installed in a cabinet, please pay attention to the installation location, ensure the good heat dissipation effect.
When wiring	Danger	★ Must comply with this manual's guidance,any construction shall be performed by a professional electrician, otherwise there would be the unexpected risk ! ★ A circuit breaker must be set between the inverter and the power supply to separate them, otherwise it may cause a fire! ★ Verify if power is a zero-energy status before wiring, otherwise there is a risk of electric shock! ★ The inverter shall be grounded correctly according to standard specifications, otherwise there is a danger of electrical shock! ★ Never connect the input power to the inverter output terminals (U, V, W) . Note that the mark of the terminals,

Process	Type	Explanation
		do not incorrectly connect wires! Otherwise which may cause damage to the driver! ★ Ensure that the distribution line meets the regional safety standards of EMC requirements. The diameter of used wire shall refer to the recommendations of this manual. Otherwise it may cause an accident! ★ When connecting to braking resistor,the braking resistor must be connected to position between terminals (P, RB) of the inverter
Before energizing	Note	★ Please confirm whether the input power voltage is same as the inverter rated voltage; wiring positions of power input terminals (R,S,T) and output terminals (U,V,W) are correct or not; and note that if there is a short circuit in the peripheral circuit connected to driver,if the connected lines are tight, otherwise it may cause damage to the driver! ★ Do not need to perform withstand voltage test for any part of the inverter,this product has been tested before leaving factory. Otherwise it may cause an accident!
	Danger	★ The inverter's cover plate must close before power on. Otherwise it may cause an electric shock! ★ Wiring of all external accessories must comply with the guidance of this manual,please correctly wiring in accordance with the circuit connection methods described in this manual. Otherwise it may cause an accident!
After energizing	Danger	★ Do not open cover plate after energizing. Otherwise there is a risk of electric shock! ★ Do not touch the driver and peripheral circuits with wet hands. Otherwise there is a risk of electric shock! ★ Do not touch any input and output terminals of the inverter. Otherwise there is a risk of electric shock! ★ The inverter automatically perform the safety testing for the external strong electrical circuit in the early stages of energizing, therefore never touch the driver terminals (U, V, W) or motor terminals, otherwise there is a risk of electric shock! ★ If you need to identify the parameters, please pay attention to the danger of injury during motor rotation. Otherwise it may cause an accident! ★ Please do not change the inverter manufacturer parameters. Otherwise it may cause damage to this unit!
During operation	Danger	★ Do not touch the cooling fan and the discharge resistor to feel the temperature. Otherwise it may cause burns! ★ Non-professional personnel is not allowed to detect signal when operating. Doing so may cause personal

Process	Type	Explanation
		injury or damage to this unit!
	Note	★ When the inverter is operating, you should avoid that objects fall into this unit.Otherwise cause damage to this unit! ★ Do not start/stop the driver by switching on/off contactor. Otherwise cause damage to this unit!
When maintaining	Danger	★ Do not perform repairs and maintenance for the live electrical equipment. Otherwise there is a risk of electric shock! ★ The repairs and maintenance task can be performed only when the inverter voltage is lower than AC36V,generally that is two minutes after powering off. Otherwise, the residual charge from capacitor would cause personal injury! ★ Non-well-trained professional personnel is not allowed to perform repairs and maintenance of inverter. Doing so may cause personal injury or damage to this unit! ★ After replacing the inverter,parameter settings must be redone, all pluggable plugs can be operated only in the case of powering off!

1-3.Precautions

No.	Type	Explanation
1	Motor insulation inspection	Please perform motor insulation inspection for the first time use, re-use after leaving unused for a long time as well as regular check, in order to prevent damage to the inverter because of the motor's winding insulation failure. Wiring between motor and inverter shall be disconnected, it is recommended that the 500V voltage type megger should be adopted and insulation resistance shall be not less than 5MΩ.
2	Motor thermal protection	If the rated capacity of the selected motor does not match the inverter, especially when the inverter rated power is greater than the motor rated power,be sure to adjust the motor protection parameter values inside inverter or install thermal relay in the front of motor for motor protection.
3	Run over power frequency	This inverter can provide (0Hz to 400Hz） output frequency If the user is required to run at 50Hz or more, please consider the endurance of your mechanical devices.
4	Vibrations of mechanical device	Inverter output frequency may be encountered mechanical resonance point of the load device, you can set jump frequency parameter inside inverter to avoid the case.

No.	Type	Explanation
5	Motor heat and noise	The inverter output voltage is PWM wave that contains a certain amount of harmonics, so the temperature rise,noise and vibration of motor show a slight higher than frequency power frequency operation.
6	Output side with piezoresistor or capacitor for improving power factor	The inverter output is PWM wave, if the piezoresistor for lightning protection or the capacitor for improving power factor is installed in the output side, which easily cause the inverter instantaneous overcurrent or even cause damage to the inverter. Please do not use.
7	Contactor or switch used in the inverter input/output terminals	If contactor is installed between power supply and inverter,the contactor is not allowed to start/stop the inverter. Necessarily need to use the contactor to control the inverter start/stop, the interval should not be less than one hour. Frequent charging and discharging may reduce the service life of the inverter capacitor. If the contactor or switch is equipped between output terminals and motor, the inverter should be turned on/off without output status, otherwise which easily lead to damage to the inverter module.
8	Use other than the rated voltage	ST series inverter is not suitable for use beyond the allowable operating voltage described in this manual,which easily cause damage to the parts inside inverter. If necessary, please use the corresponding transformer to change voltage.
9	Never change 3-phase input to 2-phase input	Never change ST series 3-phase inverter to 2-phase one for application. Otherwise it will lead to malfunction or damage to the inverter.
10	Lightning surge protection	The series inverter is equipped with lightning overcurrent protection device, so it has the ability of self-protection to lightning induction. For the area where lightning is frequent, user should also install the extra protection in the front of the inverter.
11	High altitude and derating application	When the inverter is used in areas over 1000m altitude,it is required to reduce frequency because the thin air will decrease the cooling effect of inverter. Please consult our technician for details on the application.
12	Special use	If the user need to use methods other than the suggested wiring diagram provided in this manual, such as common DC bus, please consult our technician.
13	Precautions for scrap disposal of the inverter	It may explode when electrolytic capacitors on the main circuit and printed circuit board are burned. When burning plastic parts, it may produce toxic gases.Please disposing as industrial waste.
14	About adaptive motor	1) Standard adaptive motor shall be four-pole asynchronous squirrel-cage induction motor. Apart from the said motors, please select the inverter according to the motor rated current.

No.	Type	Explanation
		2) The cooling fan and the rotor shaft for non-inverter motor are coaxially connected, the fan cooling effect is reduced when the rotational speed is reduced, therefore, when the motor works in overheating occasions,a strong exhaust fan should be retrofitted or replace non-inverter motor with the inverter motor; 3) The inverter has built-in the adaptive motor standard parameters, according to the actual situation, please identify motor parameters or accordingly modify the default values to try to meet the actual value,otherwise it will operation affect and protection performance; 4) When short-circuit of cable or motor internal will activate the inverter alarm, even bombing. Therefore, firstly perform insulation short-circuit test for the initial installation of the motor and cable, routine maintenance often also need to perform such test. Note that the parts to be tested and the inverter shall be disconnected completely when testing.
15	Others	1) Never connect the AC power to the inverter output terminals (U, V, W) . 2) Properly fix and lock the panel before powering on, so as to avoid hurting the personal safety due to internal poor capacitors. 3) Never perform wiring, checking and other operations after power is turned on. 4) Do not touch the internal circuit board and its components in order to avoid the risk of electric shock after this unit is powered, 5) Do not touch internal circuit board and any parts after powering off and within five minutes after keyboard indicator lamp goes out,you must use the instrument to confirm that internal capacitor has been discharged fully,otherwise there is a danger of electric shock. 6) Body static electricity will seriously damage the internal MOS field-effect transistors, etc.,if there are not anti-static measures, do not touch the printed circuit board and IGBT internal device with hand, otherwise it may cause a malfunction. 7) The ground terminal of the inverter (E or ⏚) shall be earthed firmly according to the provisions of the National Electrical Safety and other relevant standards. Do not shut down (power off) by pulling switch,and only cut off the power until the motor stopping operation. 8) It is required to add the optional input filter attachment so as to meet CE standards

1-4.Scope of applications

※ This inverter only applies to typical industrial three-phase AC asynchronous motor.

※ This inverter can only be used in those occasions recognized by this company, an unapproved use may result in fire, electric shock, explosion and other accidents.

※ If the inverter is used in such equipments (e.g: equipments for lifting persons,aviation systems, safety equipment, etc.) and its malfunction may result in personal injury or even death. In this case,please consult the manufacturer for your application.

Only the well-trained personnel can be allowed to operate this unit, please carefully read the instructions on safety, installation, operation and maintenance before use. The safe operation of this unit depends on proper transport, installation, operation and maintenance!

Chapter 2 Standard Specifications

2-1.Technical Specifications

Inverter model	Input voltage	Rated output Power (KW)	Rated input Current (A)	Rated output current (A)	Adaptive motor Power (KW)
ST130-0R4G1	Single phase 220V ±10%	0.4	5.4	2.5	0.4
ST130-0R7G1		0.75	8.2	4.0	0.75
ST130-1R5G1		1.5	14.0	7.0	1.5
ST130-0R4G2	Three-phase 220V ±10%	0.4	4.1	2.5	0.4
ST130-0R7G2		0.75	5.3	4.0	0.75
ST130-1R5G2		1.5	8.0	7.0	1.5

2-2.Standard specifications

Items		Specifications
Power	Voltage and frequency levels	Single phase 220V, 50/60Hz Three-phase 220V, 50/60Hz
	Allowable fluctuation	Voltage: ± 10% Frequency: ± 5%
Control system	Control system	High performance vector control inverter based on DSP
	Output frequency	0.00 to 400.0Hz
	Control method	V/F control Open-loop flux vector control
	Automatic torque boost function	Realize low frequency (1Hz) and large output torque control under the V/F control mode.
	Frequency setting resolution	Digital: 0.01Hz Analog: highest frequency × 0.2%
	V/F curve mode	Linear,square root/m-th power,custom V/F curve
	Over load capability	Rated Current 150% - 60 seconds, Rated Current 200% - 1 seconds
	Slip compensation	Slip compensation available
	Carrier Frequency	1kHz to 15kHz
	Start torque	0.5Hz/150% (Open-loop flux vector control)
	Speed range	1:100 (Open-loop flux vector control)
	Steady-speed precision (Speed control accuracy)	Open-loop flux vector control: ≤ ± 0.5% (rated synchronous speed)
	Torque response	≤40ms (Open-loop flux vector control)
	Torque boost	Automatic torque boost; manual torque boost (0.1% to 30.0%)
	Linear ac/deceleration	Linear acceleration and deceleration mode; two kinds of acceleration and deceleration time; time range 0.1s to 3600.0s.
	DC braking	DC braking frequency: 0.00Hz to max.output frequency; Braking time: 0.0 to 50.0 seconds Braking current value: 0.0% to 150.0%
	Jogging control	Jog Frequency Range: 0.00Hz to max.output frequency; Jog Ac/deceleration time: 0.1s to 3600.0s
	Multi-speed	Achieve up to 16-speed operation through the control

Items			Specifications
	operation		terminal
	Built-in STD		Easy to realize closed-loop control system for the process control.
	Automatic voltage regulation (AVR)		Automatically maintain a constant output voltage when the voltage of electricity grid changes
Running	Input signal	Running method	Keyboard/terminal/communication
		Frequency setting	Total 8 frequency stetting modes: digital,analog voltage/current, multi-speed and serial port.
		Start signal	Forward run Reverse run
		Multi-speed	At most 16-speed can be set (run by using the multi-function terminals or program)
		Multi-stage acceleration	At most 2-stage acceleration can be set (run by using the multi-function terminals)
		Emergency stop	Interrupt controller output
		Wobbulate run	Process control run
		Jog running	Slow speed running
		Fault reset	When the protection function is active, you can automatically or manually reset the fault condition.
		STD feedback signal	Including DC 0 to 10V/0 to 20mA
	Output signal	Running status	Motor status display, forward, reverse, program running status.
		Fault output	Relay contact capacity AC 250V/7A
		Analog output	1-way analog output, 9 signals can be selected such as frequency,current,voltage and other, output signal range (DC 0 to 10V/0 to 20mA) .
		Output signal	2-way output,there are 8 signals each way
	Run function		Limit frequency,jump frequency,slip compensation,reversal protection, auto-tuning, STD control
	DC current braking		Built-in STD regulates braking current to ensure sufficient braking torque under no overcurrent condition.
	Running command channel		Three channels: operation panel,control terminals and serial communication port. They can be switched through a variety of ways.

Items			Specifications
	Frequency source		Total 8 frequency sources: digital,analog voltage,analog current, multi-speed and serial port. They can be switched through a variety of ways.
	Input terminals		5 digital input terminals, compatible with the active PNP or NPN input. 2 Analog input terminals
	Output terminals		One digital output terminals (bipolar output) ; one relay output terminal; 2 analog output terminals respectively for optional range (0 to 20mA or 0 to 10V),they can be used to set frequency, output frequency, speed and other physical parameters.
Protection function	Inverter protection		Overvoltage protection, undervoltage protection, overcurrent protection, overload protection, overheat protection, overcurrent stall protection, overvoltage stall protection, external fault, communication error, STD feedback signal abnormalities.
	IGBT temperature display		Displays current temperature IGBT
	Instantaneous power-down restart		Less than 15 milliseconds: continuous operation. More than 15 milliseconds: automatic detection of motor speed, instantaneous power-down restart.
	Speed start tracking method		The inverter automatically tracks motor speed after it starts
	Parameter protection function		Protect inverter parameters by setting administrator password and decoding
Display	LED Keyboard	Running message	Monitoring objects including: running frequency, set frequency, output current, DC bus voltage, output voltage, actual motor speed, STD setting value, STD feedback value, input terminal status, output terminal status, analog AI1 value, analog AI2 value,current stage of multi-speed, torque set value, etc.
		Error message	At most save 3 error messages,and the time,type,voltage,current,frequency and terminal status can be queried when the failure is occurred.
	LED display		Display parameters
	Key lock and function selection		It can lock all keys in order to prevent misuse.
Communica -tion	RS485		Completely isolated RS485 communication module can communicate with the host computer.

Items		Specifications
Environment	Environment temperature	-10 ℃ to 40 ℃ (temperature at 40 ℃ to 50 ℃, please derating for use)
	Storage temperature	-20 ℃ to 65 ℃
	Environment humidity	Less than 90% RH, non-condensing water droplets
	Height and vibration	Below 1000m, below 5.9m/s² (= 0.6g)
	Application sites	Indoor where no sunlight or corrosive, explosive gas and water vapor, dust, flammable gas, oil mist, water vapor, drip or salt, etc.
	Altitude	Below 1000m
	Pollution degree	2
Product Standard	Product adopts safety standards.	IEC61800-5-1:2007
	Product adopts EMC standards.	IEC61800-3:2005
Cooling method		Forced air cooling

2-3.Dimensions

Appearance and installation holes size

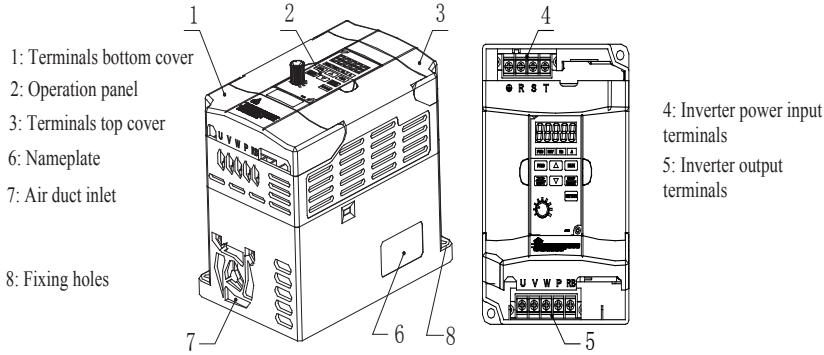

2-3-1.ST130 Series

1. 1M2

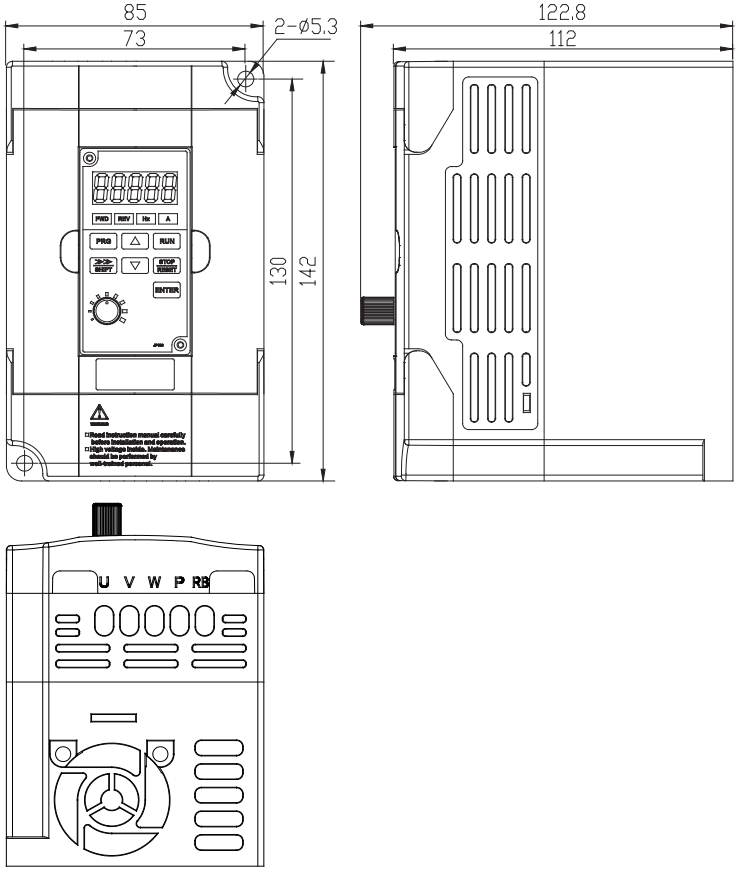

Power supply level	Type	Power (KW)
Single-phase 220V	G	0.4 to 0.75
3-phase 220V	G	0.4 to 0.75

2. 1M3

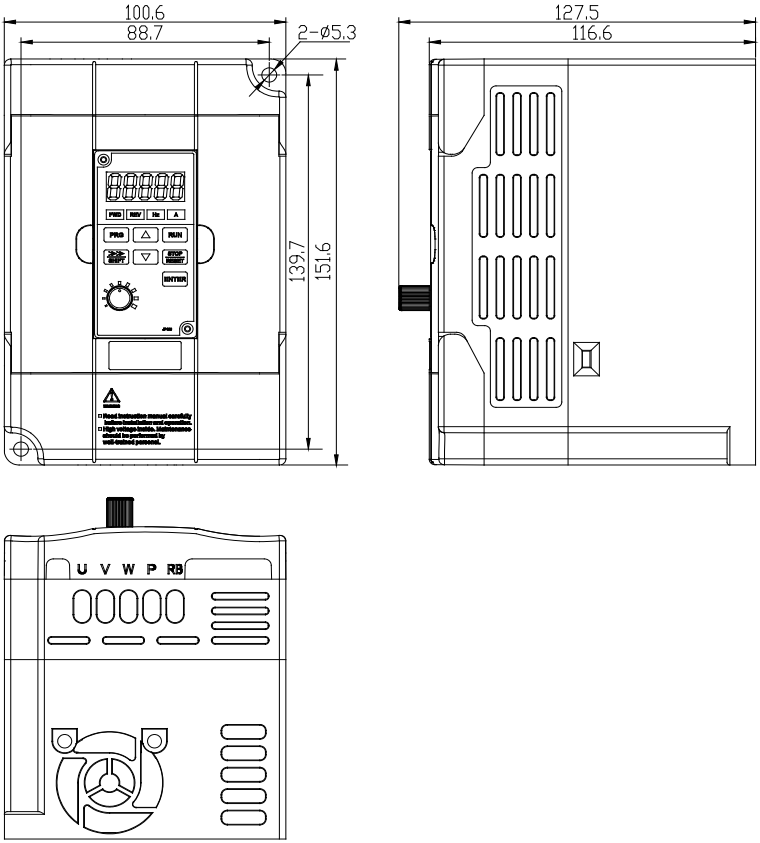

Power supply level	Type	Power (KW)
Single-phase 220V	G	1.5
3-phase 220V	G	1.5

2-3-2.Keyboard size diagram

JP130 size diagram:

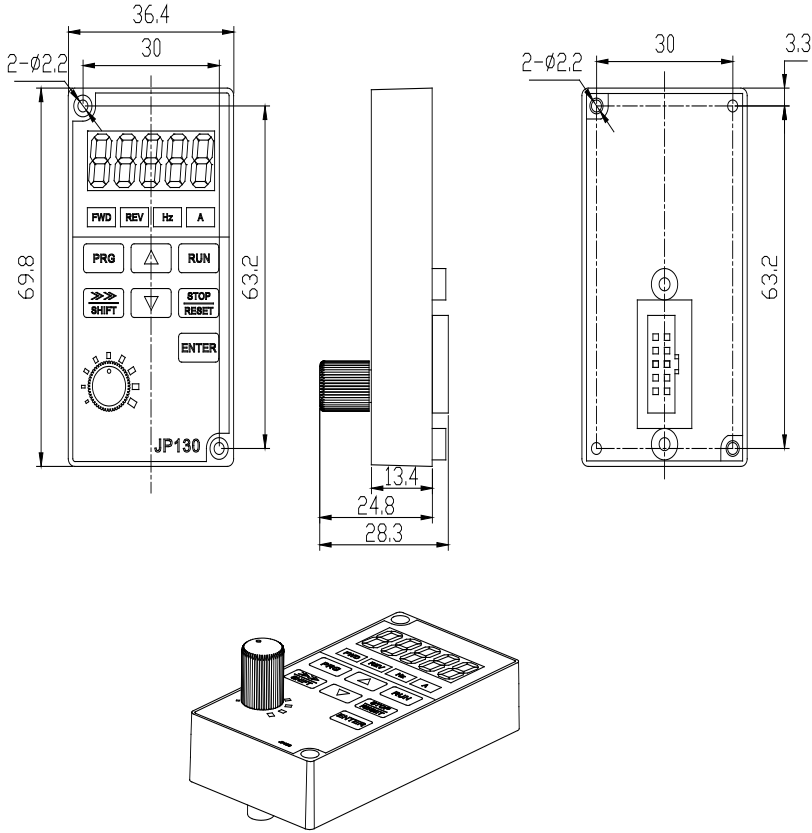

Chapter 3 Keyboard

3-1.Keyboarddescription

Keyboard Schematic Diagram

3-2.Keyboard Indicators

Indicator flag		Name	Meaning
Status Indicator	FWD	Forward running lamp	ON means that the inverter is forward operating.
	REV	Reverse running lamp	ON means that the inverter is reverse operating.
	Hz	Frequency Indicator	Frequency unit of the inverter
	A	Current Indicator	Current unit of the inverter

Correspondence that LED displays symbols and characters/digits is as follows:

	Display letters	Corresponding letters	Display letters	Corresponding letters	Display letters	Corresponding letters
Digital display area	0	0	1	1	2	2
	3	3	4	4	5	5
	6	6	7	7	8	8
	9	9	A	A	b	B

	C	C	d	d	E	E
	F	F	H	H	I	I
	L	L	n	N	n	n
	o	o	P	P	r	r
	S	S	t	t	U	U
	T	T	-	.	_	-
	y	y				

3-3.Description of operation panel keys

Sign	Name	Function
PRG	Parameter Setting/Exit Key	* Enter top menu parameter change status * Exit from function option change * Return to status display menu from sub-menu or function option menu
SHIFT	Shift Key	* Select circularly parameters under run or stop interface; select parameters when modifying the parameters.
▲	Ascending Key	* Data or function code ascending
▼	Decending Key	* Data or function code decending
RUN	Run Key	Used for running operation in the keyboard mode.
STOP RESET	Stop/Reset Key	* Press the key to stop running in running status; press the key to reset in fault alarm status, can be used to reset the operation, the key is subject to function code F6.00.
ENTER	Enter Key	* Enter into levels of menu screen,confirm settings.
	Keyboard potentiometer	* F0.02 is set to 3,keyboard potentiometer is used to set the running frequency.
ENTER + SHIFT		Simultaneously press two keys to lock or unlock the keypad.

3-4.Examples of parameter settings

Instructions on viewing and modifying function code

ST130 inverter operation panel has three levels of menu structure for parameter settings and other operations. Three levels of menu is as follows: function parameter group (first

level menu) → function code (second level menu) → function code settings (third level menu) . The operation flow is shown in the figure.

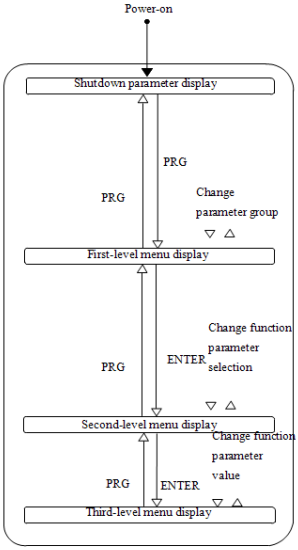

Display status and operation processes

Description: return to the second-level menu from the third-level menu by pressing PRG key or ENTER key. The difference between the two keys : press ENTER to return the second-level menu and save parameters setting before returning, and automatically transfer to the next function code; press PRG to return directly to the second-level menu, do not save parameters setting,and return to current function code .

Example 1 :restore factory default

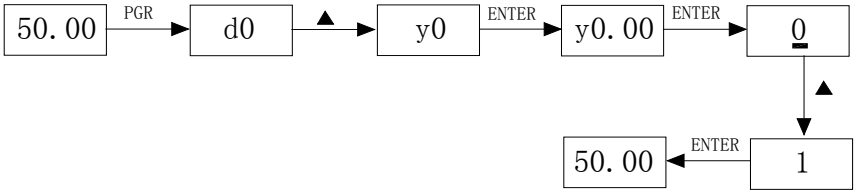

Example 2 :change function code F0.01 from 50.00Hz to 40.00Hz

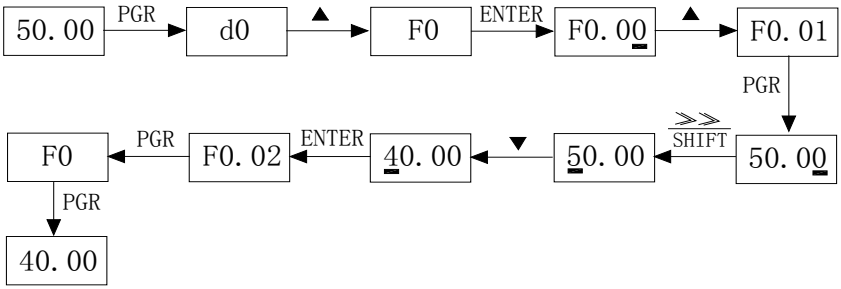

In the third-level menu status, if the parameter has not blinking bit, it means that the function code can not be modified, the possible causes include:
1) The function code can not be used to modify the parameters. Such as actual detection parameters, run record parameters.
2) The function code can not be modified in the running status,can be modified only after this unit is stopped.
How to view status parameters

In stop or run status, operate SHIFT key to display a variety of status parameters respectively. Parameter display selection depends on function code F6.01 (run parameter) and F6.02 (stop parameter) .

In stop status, there are 10 run status, you can set to display or not display them: set frequency, bus voltage, DI input status, DO output status, STD settings and STD feedback, analog input AI1 voltage, analog input AI2 voltage,and switch and display the selected parameter by pressing key orderly.

In run status, there are 16 run status, you can set to display or not display them: running frequency, set frequency, bus voltage, output voltage, output current, output power, output torque, DI input status, DO output status, analog input AI1 voltage, analog input AI2 voltage, linear speed, STD settings and STD feedback,etc, their display depends on function code F6.01, and switch and display the selected parameter by pressing key orderly.

Inverter powers off and then powers on again, the displayed parameters are the selected parameters before power-off.

3-4-1.Password Settings

The inverter has password protection, when Y0.01 is non-zero value, that is user password, password protection will enter into force when you exit from function code editing status, press the PRG key again,it will display "-----", you must enter correct user password before entering regular menus, otherwise inaccessible.

To cancel the password protection function, firstly enter correct password to access and then set Y0.01 to 0.

3-4-2.Motor parameter auto tunning

Select the operating mode of vector control, you must accurately input parameters of the motor's nameplate before inverter operation, ST130 frequency inverter will match the standard motor parameters according to the nameplate parameters; the vector control method is highly dependent on motor parameters, in order to get good control performance, the accurate parameters of the controlled motor must be required

Motor parameter auto tunning steps are as follows (Take asynchronous motor as an example) :

Firstly select command source as keyboard control (F0.04=0）. then input the following parameters according to the actual motor parameters (selection is based on the current motor) :

Motor Selection	Parameters
Motor	b0.00: motor type selection b0.01: motor rated power

	b0.02: motor rated voltage b0.03: motor rated current b0.04: motor rated frequency b0.05: motor rated speed

If the motor can completely disengage its load, please select 1 (asynchronous motor parameter comprehensive auto tunning) for b0.11, and then press the RUN key on the keyboard panel:

If the motor can NOT completely disengage its load, please select 2 (asynchronous motor parameter static auto tunning) for b0.11, and then press the RUN key on the keyboard panel, the inverter will automatically calculate the motor's following parameters:

Motor Selection	Parameters
Motor	b0.06: Asynchronous motor stator resistance b0.07: Asynchronous motor rotor resistance b0.08: Asynchronous motor stator and rotor inductance b0.09: Asynchronous motor stator and rotor mutual inductance b0.10: Asynchronous motor no-load current

Complete motor parameter auto tunning

Chapter 4 Commissioning

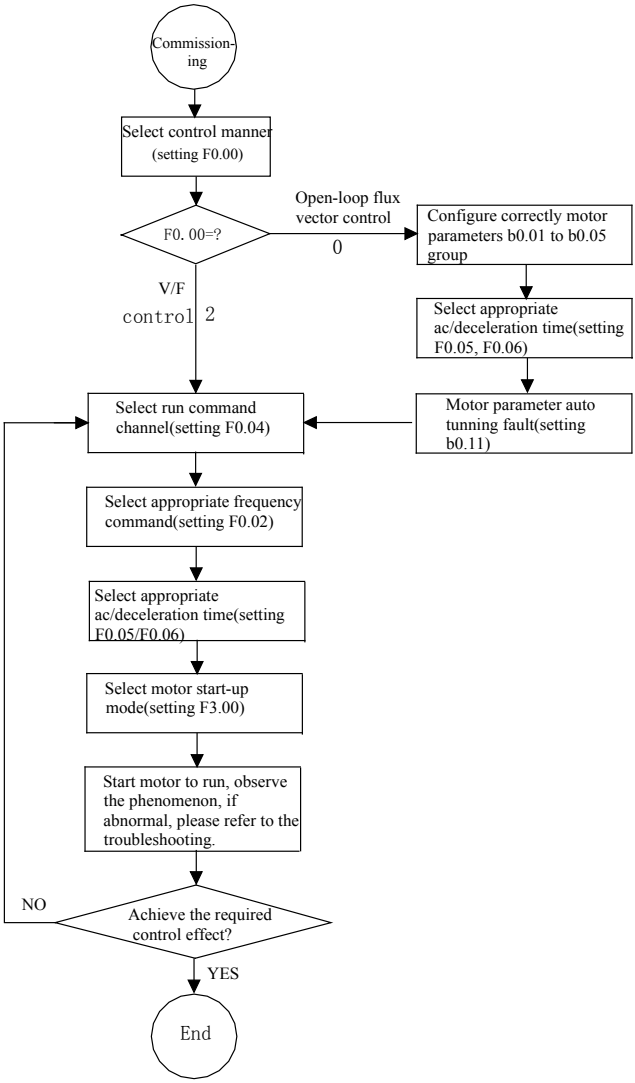

- Firstly confirm that AC input power supply voltage shall be within inverter rated input voltage range before connecting power supply to the inverter.
- Connect power supply to the R, S and T terminals of the inverter.
- Select the appropriate operation control method.

Chapter 5 Function parameter

5-1.Menu grouping

ST130 inverter function parameters are grouped by function, there is d0 group, F0 group to Fb group, E0 group to E3 group, b0 group, y0 group to y1 group, L0 group, a total of 21 groups. Each functional group includes several functional code.

F group and E group are the basic function parameters, d group is monitoring function parameters and b group is motor parameters.

In order to more effectively carry out parameter protection, the inverter provides a password protection of function code. y0.00 is used to set parameters protection password, you can enter into parameter menu only after inputing correct password under function parameters mode. Password protection is canceled when y0.00 is set to 00000.

L0 group is factory function parameters, users do not have access to the group of parameters.

Function parameter table "Change", change properties (ie, whether to allow the change or not and change conditions) and symbol description is as follows:

"★": indicates that the parameter value can not be changed when the inverter is running;

"●": indicates that the parameter value is the actual measured value, can not be changed;

"☆": indicates that the parameter value can be changed when the inverter is running or stoped;

"▲": "Factory parameters", prohibit the user to operate;

"-": indicates that the parameter factory default is none or the value is undefined.

Code	Parameter Group Name	Functional Description	Reference page
d0	Monitoring function group	Monitoring frequency, current, etc	46
F0	Basic function group	Frequency setting, control mode, acceleration and deceleration time	47
F1	Input terminals group	Analog and digital input functions	53
F2	Output terminals group	Analog and digital output functions	57
F3	Start and stop control group	Start and stop control parameters	60
F4	V/F control group	V/F control parameters	61
F5	Vector control group	Vector control parameters	64

Code	Parameter Group Name	Functional Description	Reference page
F6	Keyboard and display group	To set key and display function parameters	65
F7	Auxiliary function group	To set Jog, jump frequency and other auxiliary function parameters	67
F8	Fault and protection group	To set fault and protection parameters	70
F9	Communication parameter group	To set MODBUS communication function	73
FA	Torque control group	To set parameters under torque control mode	75
Fb	Control optimization group	To set parameters of optimizing the control performance	76
E0	Wobbulate control group	Wobbulate function parameters setting	77
E1	Multi-speed control group	Multi-speed setting	78
E2	STD control group	To set Built-in STD parameters	80
E3	Virtual DI, virtual DO group	Virtual IO setting	83
b0	Motor parameters group	To set motor parameter	87
y0	Function code management group	User password, initialization parameter setting	88
y1	Fault history search group	Information on current, former or first two faults	89

5-1-1.d0 Group - Monitoring function

No.	Code	Parameter name	Functional Description	Smallest unit	Change	Reference page
0.	d0.00	Running frequency	Inverter current actual output frequency	0.01Hz	●	46
1.	d0.01	Set frequency	Inverter current actual setting frequency	0.01Hz	●	46
2.	d0.02	DC bus voltage	Detected value for DC bus voltage	1V	●	46

No.	Code	Parameter name	Functional Description	Smallest unit	Change	Reference page
3.	d0.03	Inverter output voltage	Inverter actual output voltage	1V	●	46
4.	d0.04	Inverter output current	Inverter actual output current	0.1A	●	46
5.	d0.05	Inverter output power	Inverter actual output power	0.1kW	●	46
6.	d0.06	Inverter output torque	Inverter actual output torque percentage	1%	●	46
7.	d0.07	Input terminal status	Input terminal status	-	●	46
8.	d0.08	Output terminal status	Output terminal status	-	●	46
9.	d0.09	Analog AI1 value	Analog AI1 input voltage value	0.01V	●	47
10.	d0.10	Analog AI2 value	Analog AI2 input voltage value	0.01V	●	47
11.	d0.11	Panel potentiometer voltage	Panel potentiometer setting voltage value	0.01V	●	47
12.	d0.12	Motor actual speed	Motor actual running speed	1rpm	●	47
13.	d0.13	STD setting value	Setting value percentage under STD adjustment mode	1%	●	47
14.	d0.14	STD feedback value	Feedback value percentage under STD adjustment mode	1%	●	47
15.	d0.15	Current stage of multi-speed	Current stage of multi-speed	-	●	47
16.	d0.16	Reserved				
17.	d0.17	Inverter module temperature	0 to 100.0℃	0.1℃	●	47
18.	d0.18	Software version	DSP software version number	-	●	47

No.	Code	Parameter name	Functional Description	Smallest unit	Change	Reference page
19.	d0.19	Cumulative running time of this unit	0 to 65535h	1h	●	47
20.	d0.20	Torque setting value	Observe the set command torque under speed mode or torque control mode	0.1%	●	47

5-1-2.F0 Group - Basic function

No.	Code	Parameter name	Setting range	Factory default	Change	Reference page
21.	F0.00	Control mode	0: Open-loop flux vector control 1: Reserved 2: V/F control 3: torque control	2	★	48
22.	F0.01	Keyboard set frequency	0.00Hz to F0.08 (maximum output frequency)	50.00Hz	☆	48
23.	F0.02	Frequency command selection	0: keyboard setting 1: Analog AI1 setting 2: Analog AI2 setting 3: Panel potentiometer setting 4: AI1+ AI2 setting 5: Multi-speed operation setting 6: STD control setting 7: Remote communications setting	0	☆	48
24.	F0.03	Keyboard and terminal UP/DOWN setting	0: Valid, and the inverter power failure with data storage 1: Valid, and the inverter power failure without data storage 2: UP/DOWN setting is invalid 3: Valid when running, invalid when stop	0	☆	49

No.	Code	Parameter name	Setting range	Factory default	Change	Reference page
25.	F0.04	Command source channel	0: Keyboard command channel 1: Terminal command channel 2: Communication command channel	0	★	50
26.	F0.05	Acceleration time 1	0.1 to 3600.0s	Depends on models	☆	50
27.	F0.06	Deceleration time 1	0.1 to 3600.0s	Depends on models	☆	50
28.	F0.07	Carrier frequency setting	1.0 to 15.0kHz	Depends on models	☆	51
29.	F0.08	Maximum output frequency	10.00 to 400.00Hz	50.00Hz	★	51
30.	F0.09	Upper limit frequency setting source selection	0: Keyboard setting (F0.10) 1: Analog AI1 setting 2: Analog AI2 setting 3: Multi-speed setting 4: Remote communications setting Note: Option 1 to 4, the setting value 100% corresponds to the maximum output frequency	0	☆	51
31.	F0.10	Running frequency upper limit	F0.11 to F0.08 (maximum output frequency)	50.00Hz	☆	52
32.	F0.11	Running frequency lower limit	0.00Hz to F0.10 (running frequency upper limit)	0.00Hz	☆	52
33.	F0.12	Running direction selection	0: default 1: opposite 2: reverse prohibited	0	★	52

No.	Code	Parameter name	Setting range	Factory default	Change	Reference page
34.	F0.13	AVR function selection	0: Invalid 1: full valid 2: only invalid during deceleration	1	☆	52

5-1-3.F1 Group - Input terminals

No.	Code	Parameter name	Setting range	Factory default	Change	Reference page
35.	F1.00	DI1 terminal function selection	0: No function 1: Forward run 2: Reverse run 3: Three-wire operation control 4: Forward Jog 5: Reverse Jog 6: Frequency setting increment (UP) 7: Frequency setting decrement (DOWN) 8: Free stop 9: Fault reset 10: External fault input 11: Frequency change settings clear 12: Multi-speed terminal 1 13: Multi-speed terminal 2 14: Multi-speed terminal 3 15: Multi-speed terminal 4 16: Ac/deceleration time selection 17: Control command switch terminal 18: Ac/deceleration prohibited 19: STD control pause 20: Wobbulate pause (stops at the current frequency)	1	★	53
36.	F1.01	DI2 terminal function selection		2	★	53
37.	F1.02	DI3 terminal function selection		8	★	53
38.	F1.03	DI4 terminal function selection		9	★	53
39.	F1.04	DI5 terminal function selection		4	★	53
40.	F1.05	Reserved				

No.	Code	Parameter name	Setting range	Factory default	Change	Reference page
			21: Wobbulate reset (returns to the center frequency) 22: Torque control prohibited 23: Frequency change settings temporarily clear 24: Stop DC braking 25: Reserved			
41.	F1.06	Terminal control operation mode	0: Two-wire type control 1 1: Two-wire type control 2 2: Three-wire type control 1 3: Three-wire type control 2	0	★	55
42.	F1.07	Change rate of terminal UP/DOWN frequency increment	0.01 to 50.00Hz/s	0.50Hz/s	☆	56
43.	F1.08	AI1 lower limit	0.00V to F1.10	0.00V	☆	56
44.	F1.09	AI1 lower limit setting	-100.0% to 100.0%	0.0%	☆	56
45.	F1.10	AI1 upper limit	F1.08 to 10.00V	10.00V	☆	56
46.	F1.11	AI1 upper limit setting	-100.0% to 100.0%	100.0%	☆	56
47.	F1.12	Filter time of AI1 input	0.00s to 10.00s	0.10s	☆	56
48.	F1.13	AI2 lower limit	0.00V to F1.15	0.00V	☆	57
49.	F1.14	AI2 lower limit setting	-100.0% to 100.0%	0.0%	☆	57
50.	F1.15	AI2 upper limit	F1.13 to 10.00V	10.00V	☆	57
51.	F1.16	AI2 upper limit setting	-100.0% to 100.0%	100.0%	☆	57

No.	Code	Parameter name	Setting range	Factory default	Change	Reference page
52.	F1.17	Filter time of AI2 input	0.00s to 10.00s	0.10s	☆	57
53.	F1.18	Times of switching quantity filtering	1 to 10	5	☆	57
54.	F1.19	DI terminal mode selection	0x000 to 0x1FF	000	☆	57

5-1-4.F2 Group - Output terminals

No.	Code	Parameter name	Setting range	Factory default	Change	Reference page
55.	F2.00	MO1 output selection	0: No output 1: Motor forward running 2: Motor reverse running 3: Fault output 4: Frequency level detection FDT output 5: Frequency arrival 6: Zero speed running 7: Upper limit frequency arrival 8: Lower limit frequency arrival 9 to 10: Reserved	1	☆	57
56.	F2.01	Reserved				
57.	F2.02	Reserved				
58.	F2.03	Relay output selection		1	☆	57
59.	F2.04	AO1 output selection	0: Running frequency 1: Set frequency 2: Output current 3: Output torque 4: Output power 5: Output voltage 6: Analog input AI1 value 7: Analog input AI2 value 8: Run speed 9 to 10: Reserved	0	☆	58

No.	Code	Parameter name	Setting range	Factory default	Change	Reference page
60.	F2.05	AO1 output lower limit	0.0% to F2.07	0.0%	☆	59
61.	F2.06	Lower limit corresponds to AO1 output	0.00V to 10.00V	0.00V	☆	59
62.	F2.07	AO1 output upper limit	F2.05 to 100.0%	100.0%	☆	59
63.	F2.08	Upper limit corresponds to AO1 output	0.00V to 10.00V	10.00V	☆	59
64.	F2.09 to F2.10	Reserved				
65.	F2.14	D0 terminal active status selection	0x00 to 0x1F	00	☆	59

5-1-5.F3 Group - Start and stop control

No.	Code	Parameter name	Setting range	Factory default	Change	Reference page
66.	F3.00	Start running mode	0: Directly startup 1: Speed tracking restart 2: First DC braking and then start	0	★	60
67.	F3.01	Startup start frequency	0.00 to 10.00Hz	0.50Hz	☆	60
68.	F3.02	Hold time for start frequency	0.0 to 50.0s	0.0 s	☆	60
69.	F3.03	Braking current before start	0.0 to 150.0%	0.0%	☆	60
70.	F3.04	Braking time before start	0.0 to 50.0s	0.0 s	☆	60
71.	F3.05	Stop mode selection	0: Deceleration stop 1: Free stop	0	☆	60
72.	F3.06	Start frequency of stop braking	0.00 to F0.08 (maximum output frequency)	0.00Hz	☆	61

No.	Code	Parameter name	Setting range	Factory default	Change	Reference page
73.	F3.07	Waiting time of stop braking	0.0 to 50.0s	0.0 s	☆	61
74.	F3.08	Stop DC braking current	0.0 to 150.0%	0.0%	☆	61
75.	F3.09	Stop DC braking time	0.0 to 50.0s	0.0 s	☆	61

5-1-6.F4 Group - V/F control

No.	Code	Parameter name	Setting range	Factory default	Change	Reference page
76.	F4.00	V/F curve setting	0: linear V/F curve 1: multi-point V/F curve 2: square V/F curve 3:1.75th power V/F curve 4:1.25th power V/F curve	0	★	62
77.	F4.01	Torque boost	0.0%: automatic torque boost 0.1% to 30.0%	0.0%	☆	62
78.	F4.02	Torque boost cut-off	0.0% to 50.0% (relative to rated frequency of motor)	20.0%	★	62
79.	F4.03	V/F frequency point 1	0.00Hz to F4.05	0.00Hz	★	63
80.	F4.04	V/F voltage point 1	0.0% to 100.0%	0.0%	★	63
81.	F4.05	V/F frequency point 2	F4.03 to F4.07	0.00Hz	★	63
82.	F4.06	V/F voltage point 2	0.0% to 100.0%	0.0%	★	63
83.	F4.07	V/F frequency point 3	F4.05 to b0.04 (rated motor frequency)	0.00Hz	★	63
84.	F4.08	V/F voltage point 3	0.0% to 100.0%	0.0%	★	63

No.	Code	Parameter name	Setting range	Factory default	Change	Reference page
85.	F4.09	V/F slip compensation limit	0.0 to 200.0%	0.0%	☆	64

5-1-7.F5 Group - Vector control group

No.	Code	Parameter name	Setting range	Factory default	Change	Reference page
86.	F5.00	Speed loop proportional gain 1	0 to 100	20	☆	64
87.	F5.01	Speed loop integral time 1	0.01 to 10.00s	0.50 s	☆	64
88.	F5.02	Switching low point frequency	0.00Hz to F5.05	5.00Hz	☆	64
89.	F5.03	Speed loop proportional gain 2	0 to 100	15	☆	64
90.	F5.04	Speed loop integral time 2	0.01 to 10.00s	1.00	☆	64
91.	F5.05	Switching high point frequency	F5.02 to F0.08 (maximum output frequency)	10.00Hz	☆	64
92.	F5.06	VC slip compensation coefficient	50 to 200.0% (rated inverter current)	100%	☆	65
93.	F5.07	Torque upper limit setting	0.0 to 200%	150%	☆	65

5-1-8.F6 Group - Keyboard and display

No.	Code	Parameters	Setting range	Factory default	Change	Reference page
94.	F6.00	STOP/RST key stop function selection	0: only active to panel control 1: Valid for both panel control and terminal control 2: Valid for both panel control and communication control 3: Valid for all control modes	0	☆	65

No.	Code	Parameters	Setting range	Factory default	Change	Reference page
95.	F6.01	Running status display parameters selection	0 to 0xFFFF BIT0: Running frequency BIT1: Set frequency BIT2: Bus voltage BIT3: Output voltage BIT4: Output current BIT5: Running speed BIT6: Output power BIT7: Output torque BIT8: STD setting value BIT9: STD feedback value BIT10: Input terminal status BIT11: Output terminal status BIT12: Analog AI1 value BIT13: Analog AI2 value BIT14: Current stage of multi-speed BIT15: Torque set value.	03FF	☆	66
96.	F6.02	Stop status display parameters selection	1 to 0x3FF BIT0: Set frequency BIT1: Bus voltage BIT2: Input terminal status BIT3: Output terminal status BIT4: STD setting value BIT5: STD feedback value BIT6: Analog AI1 value BIT7: Analog AI2 value BIT8: Current stage of multi-speed BIT9: Torque set	0FF	☆	66

No.	Code	Parameters	Setting range	Factory default	Change	Reference page
			value. BIT10 to BIT15: Reserved			
97.	F6.03	Speed display coefficient	0.1 to 999.9%	100.0%	☆	66
98.	F6.04 to F6.07	Reserved				

5-1-9.F7 Group - Auxiliary function

No.	Code	Parameter name	Setting range	Factory default	Change	Reference page
99.	F7.00	Jog running frequency	0.00 to F0.08 (maximum output frequency)	5.00Hz	☆	67
100.	F7.01	Jog running acceleration time	0.1 to 3600.0s	Depends on models	☆	67
101.	F7.02	Jog running deceleration time	0.1 to 3600.0s	Depends on models	☆	67
102.	F7.03	Acceleration time 2	0.1 to 3600.0s	Depends on models	☆	67
103.	F7.04	Deceleration time 2	0.1 to 3600.0s	Depends on models	☆	67
104.	F7.05	Jump frequency	0.00 to F0.08 (maximum output frequency)	0.00Hz	☆	67
105.	F7.06	Jump frequency range	0.00 to F0.08 (maximum output frequency)	0.00Hz	☆	67
106.	F7.07	Jump frequency availability during ac/deceleration process	0: Invalid 1: Valid	0	☆	68
107.	F7.08	Forward/reverse rotation deadband	0.0 to 3600.0s	Depends on models	☆	68
108.	F7.09	Power terminals running protection	0: Power terminals	0	☆	69

No.	Code	Parameter name	Setting range	Factory default	Change	Reference page
		selection	running command Invalid 1: Power terminals running command Valid			
109.	F7.10	FDT level detection value	0.00 to F0.08 (maximum output frequency)	50.00Hz	☆	69
110.	F7.11	FDT hysteresis detection value	0.0 to 100.0% (FDT level)	5.0%	☆	69
111.	F7.12	Frequency reaches detection width	0.0 to 100.0% (Set frequency)	0.0%	☆	70
112.	F7.13	Braking threshold voltage	115.0 to 140.0% (standard bus voltage)	120.0%	☆	70

5-1-10.F8 Group - Fault and protection

No.	Code	Parameter name	Setting range	Factory default	Change	Reference page
113.	F8.00	Automatic current limiting level	100 to 200%	160%	☆	70
114.	F8.01	Frequency fall rate at current limiting	0.00 to 100.00Hz/s	10.00Hz/s	☆	71
115.	F8.02	Current limiting action selection	0: Always valid 1: Constant speed invalid	0	☆	71
116.	F8.03	Motor overload protection selection	0: OFF 1: normal motor (with low speed compensation) 2: inverter motor (without low speed compensation)	2	★	71

No.	Code	Parameter name	Setting range	Factory default	Change	Reference page
117.	F8.04	Motor overload protection current	20.0% to 120.0% (rated motor current)	100.0%	☆	72
118.	F8.05	Overvoltage stall protection	0: Disable 1: Enable	0	☆	72
119.	F8.06	Overvoltage stall protection voltage	110 to 150% (220V series)	115%	☆	72
120.	F8.07	Number of automatic fault reset	0 to 3	0	☆	72
121.	F8.08	Automatic fault reset interval setting	0.1 to 100.0s	1.0 s	☆	72
122.	F8.09	Descending frequency point of momentary power failure	70.0 to 110.0% (standard bus voltage)	80.0%	☆	73
123.	F8.10	Frequency fall rate at momentary power failure	0.00Hz/s to F0.08 (maximum output frequency)	0.00Hz/s	☆	73

5-1-11.F9 Group - Communication parameter

No.	Code	Parameter name	Setting range	Factory default	Change	Reference page
124.	F9.00	Communication baud rate setting	0: 1200bps 1: 2400bps 2: 4800bps 3: 9600bps 4: 19200bps 5: 38400bps	3	☆	73
125.	F9.01	Data bits parity settings	0: no parity (N, 8, 1) for RTU 1: even parity (E, 8, 1) for RTU 2: odd parity (O, 8, 1) for RTU 3: no parity (N, 8, 2) for RTU 4: even parity (E, 8, 2) for RTU	1	☆	73

No.	Code	Parameter name	Setting range	Factory default	Change	Reference page
			5: odd parity (O, 8, 2) for RTU 6: no parity (N, 7, 1) for ASCII 7: even parity (E, 7, 1) for ASCII 8: odd parity (O, 7, 1) for ASCII 9: no parity (N, 7, 2) for ASCII 10: even parity (E, 7, 2) for ASCII 11: odd parity (O, 7, 2) for ASCII 12: no parity (N, 8, 1) for ASCII 13: even parity (E, 8, 1) for ASCII 14: odd parity (O, 8, 1) for ASCII 15: no parity (N, 8, 2) for ASCII 16: even parity (E, 8, 2) for ASCII 17: odd parity (O, 8, 2) for ASCII			
126.	F9.02	Communication address of this unit	1 to 247, 0 for broadcast address	1	☆	74
127.	F9.03	Communication response delay	0 to 200ms	5ms	☆	74
128.	F9.04	Communication timeout fault time	0.0 (Invalid）; 0.1 to 100.0s	0.0 s	☆	74
129.	F9.05	Data transfer format selection	0: non-standard MODBUS protocol 1: standard MODBUS protocol 2: ASCII	0	☆	75
130.	F9.06	Transmission error handling	0: Alarm and free stop 1: No alarm and continue to run 2: No alarm and stop at the selected mode (under	1	☆	75

No.	Code	Parameter name	Setting range	Factory default	Change	Reference page
			communication control mode only) 3: No alarm and stop at the selected mode (under all control modes)			
131.	F9.07	Transmission response handling	0: Write operations responded 1: Write operations not responded	0	☆	75

5-1-12.FA Group - Torque control

No.	Code	Parameter name	Setting range	Factory default	Change	Reference page
132.	FA.00	Torque setting mode selection	0: Keyboard setting (FA.01) 1: Analog AI1 setting 2: Analog AI2 setting 3: Panel potentiometer setting 4: Analog AI1+AI2 setting 5: Multi-segment torque setting 6: Remote communications setting Note: Option 1 to 6, 100% relative to two times of the rated current of inverter	0	☆	75
133.	FA.01	Keyboard set torque	-200.0% to 200.0% (rated current of inverter)	50.0%	☆	76

5-1-13.Fb Group - Control optimization

No.	Code	Parameter name	Setting range	Factory default	Change	Reference page
134.	Fb.00	Software overcurrent point	4 to 2000A	Depends on models	★	76
135.	Fb.01	Software undervoltage point	0 to 500V	Depends on models	★	76
136.	Fb.02	Software overvoltage point	300 to 800V	Depends on models	★	76
137.	Fb.03	Low-frequency threshold point of oscillation suppression	0 to 500	5	☆	76

No.	Code	Parameter name	Setting range	Factory default	Change	Reference page
138.	Fb.04	High-frequency threshold point of oscillation suppression	0 to 500	100	☆	76
139.	Fb.05	Amplitude limit value of oscillation suppression	0 to 10000	5000	☆	77
140.	Fb.06	Demarcation frequency of high and low frequency of oscillation suppression	0.00Hz to F0.08 (maximum output frequency)	12.50Hz	☆	77
141.	Fb.07	Oscillation suppression	0: valid 1: invalid	1	☆	77
142.	Fb.08	PWM selection	0: PWM mode 1 1: PWM mode 2 2: PWM mode 3	0	★	77
143.	Fb.09	Energy-saving selection	0: OFF 1. Auto	0	★	77
144.	Fb.10	Deadband time	2 to 5	Depends on models	★	77

5-1-14.E0 Group - Wobbulate control

No.	Code	Parameter name	Setting range	Factory default	Change	Reference page
145.	E0.00	Wobbulate range	0.0 to 100.0% (relative to setting frequency)	0.0%	☆	78
146.	E0.01	Sudden jump frequency range	0.0 to 50.0% (relative to Wobbulate amplitude)	0.0%	☆	78
147.	E0.02	Wobbulate rise time	0.1 to 3600.0s	5.0 s	☆	78
148.	E0.03	Wobbulate fall time	0.1 to 3600.0s	5.0 s	☆	78

5-1-15.E1 Group - Multi-speed control

No.	Code	Parameter name	Setting range	Factory defaul	Change	Reference page
149.	E1.00	Multi-speed 0	-100.0 to 100.0%	0.0%	☆	78
150.	E1.01	Multi-speed 1	-100.0 to 100.0%	0.0%	☆	78

No.	Code	Parameter name	Setting range	Factory default	Change	Reference page
151.	E1.02	Multi-speed 2	-100.0 to 100.0%	0.0%	☆	78
152.	E1.03	Multi-speed 3	-100.0 to 100.0%	0.0%	☆	79
153.	E1.04	Multi-speed 4	-100.0 to 100.0%	0.0%	☆	79
154.	E1.05	Multi-speed 5	-100.0 to 100.0%	0.0%	☆	79
155.	E1.06	Multi-speed 6	-100.0 to 100.0%	0.0%	☆	79
156.	E1.07	Multi-speed 7	-100.0 to 100.0%	0.0%	☆	79
157.	E1.08	Multi-speed 8	-100.0 to 100.0%	0.0%	☆	79
158.	E1.09	Multi-speed 9	-100.0 to 100.0%	0.0%	☆	79
159.	E1.10	Multi-speed 10	-100.0 to 100.0%	0.0%	☆	79
160.	E1.11	Multi-speed 11	-100.0 to 100.0%	0.0%	☆	79
161.	E1.12	Multi-speed 12	-100.0 to 100.0%	0.0%	☆	79
162.	E1.13	Multi-speed 13	-100.0 to 100.0%	0.0%	☆	79
163.	E1.14	Multi-speed 14	-100.0 to 100.0%	0.0%	☆	79
164.	E1.15	Multi-speed 15	-100.0 to 100.0%	0.0%	☆	79

5-1-16.E2 Group - STD control

No.	Code	Parameter name	Setting range	Factory default	Change	Reference page
165.	E2.00	STD setting source selection	0: Keyboard setting (E2.01) 1: Analog channel AI1 setting 2: Analog channel AI2 setting 3: Panel potentiometer setting 4: Remote communications setting 5: Multi-speed setting	0	☆	80
166.	E2.01	Keyboard preset STD setting	0.0 to 100.0%	50.0%	☆	81
167.	E2.02	STD feedback	0: Analog channel	0	☆	81

No.	Code	Parameter name	Setting range	Factory default	Change	Reference page
		source selection	AI1 feedback 1: Analog channel AI2 feedback 2: Panel potentiometer feedback 3: AI1-AI2 feedback 4: Remote communications feedback 5: AI1+AI2 feedback 6: MAX (｜AI1｜, ｜AI2｜) 7: MIN (｜AI1｜, ｜AI2｜)			
168.	E2.03	STD output selection	0: STD output is positive 1: STD output is negative	0	☆	81
169.	E2.04	Proportional gain (KP)	0.00 to 100.00	1.00	☆	81
170.	E2.05	Integration time (Ti)	0.01 to 10.00s	0.10s	☆	81
171.	E2.06	Differential time (Td)	0.00 to 10.00s	0.00 s	☆	81
172.	E2.07	Sampling period (T)	0.01 to 100.00s	0.10s	☆	82
173.	E2.08	STD control deviation limit	0.0 to 100.0%	0.0%	☆	82
174.	E2.09	Feedback disconnection detection value	0.0 to 100.0%	0.0%	☆	83
175.	E2.10	Feedback disconnection detection time	0.0 to 3600.0s	1.0 s	☆	83

5-1-17.E3 Group - Virtual DI, Virtual DO

No.	Code	Parameter name	Setting range	Factory default	Change	Reference page

No.	Code	Parameter name	Setting range	Factory default	Change	Reference page
176.	E3.00	VDI1 function	0 to 25	0	★	83
177.	E3.01	VDI2 function	0 to 25	0	★	83
178.	E3.02	VDI3 function	0 to 25	0	★	83
179.	E3.03	VDI4 function	0 to 25	0	★	84
180.	E3.04	VDI5 function	0 to 25	0	★	84
181.	E3.05	VDI active mode	Units digit: Virtual VDI1 Tens digit: Virtual VDI2 Hundreds digit: Virtual VDI3	00000	★	84
182.	E3.06	VDI status setting	Units digit: Virtual VDI1 Tens digit: Virtual VDI2 Hundreds digit: Virtual VDI3	11111	★	84
183.	E3.07	AI1_DI function	0 to 25	0	★	85
184.	E3.08	AI2_DI function	0 to 25	0	★	85
185.	E3.09	Panel	0 to 25	0	★	85
186.	E3.10	AI_DI mode	Units digit: AI1 0: high level active 1: low level active Tens digit: AI2 (same as units digit) Hundreds digit: Panel	000	★	85
187.	E3.11	VDO1 output	0 to 10	0	☆	86
188.	E3.12	VDO2 output	0 to 10	0	☆	86
189.	E3.13	VDO3 output	0 to 10	0	☆	86
190.	E3.14	VDO4 output	0 to 10	0	☆	86
191.	E3.15	VDO5 output	0 to 10	0	☆	86

No.	Code	Parameter name	Setting range	Factory default	Change	Reference page
192.	E3.16	VDO valid state	Units digit: VDO1 0: positive logic 1: negative logic Tens digit: VDO2 (same as units digit) Hundreds digit: VDO3 (same as units	00000	☆	86
193.	E3.17	VDO1 delay time	0.0 to 3600.0s	0.0 s	☆	86
194.	E3.18	VDO2 delay time	0.0 to 3600.0s	0.0 s	☆	86
195.	E3.19	VDO3 delay time	0.0 to 3600.0s	0.0 s	☆	86
196.	E3.20	VDO4 delay time	0.0 to 3600.0s	0.0 s	☆	86
197.	E3.21	VDO5 delay time	0.0 to 3600.0s	0.0 s	☆	86

5-1-18.**b0 Group - Motor parameters**

No.	Code	Parameter name	Setting range	Factory default	Change	Reference page
198.	b0.00	Inverter type	0: G-type machine; 1: Reserved	0	★	87
199.	b0.01	Rated motor power	0.4 to 900.0kW	Depends on models	★	87
200.	b0.02	Rated motor voltage	0 to 460V	Depends on models	★	87
201.	b0.03	Rated motor current	0.1 to 2000.0A	Depends on models	★	87
202.	b0.04	Rated motor frequency	0.01Hz to F0.08 (maximum output frequency)	50.00Hz	★	87
203.	b0.05	Rated motor speed	0 to 36000rpm	Depends on models	★	87
204.	b0.06	Motor stator resistance	0.001 to 65.535Ω	Depends on models	☆	87
205.	b0.07	Motor rotor resistance	0.001 to 65.535Ω	Depends on models	☆	87

No.	Code	Parameter name	Setting range	Factory default	Change	Reference page
206.	b0.08	Motor stator and rotor inductance	0.1 to 6553.5mH	Depends on models	☆	87
207.	b0.09	Motor stator and rotor mutual inductance	0.1 to 6553.5mH	Depends on models	☆	87
208.	b0.10	Motor no-load current	0.01 to 655.35A	Depends on models	☆	87
209.	b0.11	Motor parameter auto tunning	0: no operation 1: Motor parameters comprehensive auto tunning 2: Motor parameters static auto tunning	0	★	88

5-1-19.**y0 Group - Function code management**

No.	Code	Parameter name	Setting range	Factory default	Change	Reference page
210.	y0.00	Function parameter recovery	0: no operation 1: Restore defaults 2: Clear fault history 3: Backup parameters 4: Restore from backup	0	★	88
211.	y0.01	User password	0 to 65535	0	★	89

5-1-20.**y1 Group - Fault history search**

No.	Code	Parameter name	Setting range	Factory default	Change	Reference page
212.	y1.00	Type of the first two faults	0 to 22	0	●	89
213.	y1.01	Type of the first fault	0 to 22	0	●	89
214.	y1.02	Type of current fault	0 to 22	0	●	89
215.	y1.03	Running frequency of current fault		0.00Hz	●	90
216.	y1.04	Output current of current fault		0.0A	●	90

No.	Code	Parameter name	Setting range	Factory default	Change	Reference page
217.	y1.05	Bus voltage of current fault		0V	●	90
218.	y1.06	Input terminal status of current fault		0	●	90
219.	y1.07	Output terminal status of current fault		0	●	90

5-2.Function parameter description

5-2-1.dO Group - Monitoring function group

d0 parameters group is used to monitor the inverter running status information,user can view those information through the panel to facilitate on-site commissioning, also read parameters group value via communication for host computer monitoring.

Parameter function code	Parameter name	Smallest unit
d0.00	Running frequency	0.01Hz
Actual output frequency of inverter running		
d0.01	Set frequency	0.01Hz
Inverter current actual setting frequency		
d0.02	DC bus voltage	1V
Inverter bus voltage value		
d0.03	Inverter output voltage	1V
Actual output voltage when the inverter running		
d0.04	Inverter output current	0.1A
Actual output current when the inverter running		
d0.05	Inverter output power	0.1kW
Actual output power when the inverter running		
d0.06	Inverter output torque	1%
Actual output torque percentage when the inverter running		
d0.07	Input terminal status	-
DI input terminal status is currently displayed, when it is converted into binary data, one bit corresponds to one DI terminal input signal, 1 indicates that the input terminal is high level signal, 0 indicates that the input terminal is low-level signal.		
d0.08	Output terminal status	-

Bit0	Bit1	Bit2	Bit3	Bit4
DI1	DI2	DI3	DI4	DI5
Bit5	Bit6	Bit7	Bit8	Bit9
Reserved	Reserved	Reserved	Reserved	Reserved

Parameter function code	Parameter name	Smallest unit
Displays current output terminal state value. When it is converted into binary data, one bit corresponds to one output terminal input signal, 1 indicates that the input terminal is high level signal, 0 indicates that the output terminal is low-level signal.		
d0.09	Analog AI1 value	0.01V
Analog AI1 input voltage value		
d0.10	Analog AI2 value	0.01V
Analog AI2 input voltage value		
d0.11	Panel potentiometer voltage	0.01V
Panel potentiometer input voltage value		
d0.12	Motor actual speed	1rpm
Display motor actual running speed		
d0.13	STD setting value	0.1%
Setting value percentage under STD adjustment mode		
d0.14	STD feedback value	0.1%
Feedback value percentage under STD adjustment mode		
d0.15	Current stage of multi-speed	-
Display current stage of multi-speed		
d0.16	Reserved	
d0.17	Inverter module temperature	0.1℃
Display the inverter module temperature		
d0.18	Software version	-
Display DSP software version number		
d0.19	Cumulative running time of this unit	1h
Display the total run time of inverter		
d0.20	Torque setting value	0.1%
Observe the set command torque under the speed control mode or the torque control mode		

Bit0	Bit1	Bit2	Bit3	Bit4
MO1	Reserved	Reserved	R0	Reserved

5-2-2.F0 Group - Basic function group

Code	Parameter name	Setting range		Factory default	Change
F0.00	Control mode	Open-loop flux vector control	0	2	★
		Reserved	1		
		V/F control	2		
		Torque control	3		
Select the operating mode of inverter: 0: open-loop flux vector control: refers to that the open-loop flux vector control is suitable for high-performance general-purpose applications where the encoder PG is not installed, an inverter can only drive one motor. Such as machine tools, centrifuges, wire drawing machines, injection molding machines and other loads. 1: Reserved 2: V/F control: suitable for applications that demanding less control accuracy, such as fans, pumps and other loads. It can used for occasions that one inverter drives multiple motors. 3: Torque control: suitable for applications that demanding less torque control accuracy, such as wound, drawing and other occasions. In torque control mode, the motor speed is determined by the motor load, its acceleration and deceleration speed is no longer determined by the inverter deceleration time. Note: open-loop flux vector control and torque control must perform motor auto tunning firstly.					
F0.01	Keyboard set frequency	0.00Hz to F0.08 (maximum output frequency)		50.00Hz	☆
When the frequency command is selected as "Keyboard Setting", the function code value is the initial value of inverter frequency digital setting.					
F0.02	Frequency command selection	Keyboard digital setting	0	0	☆
		Analog AI1 setting	1		
		Analog AI2 setting	2		
		Panel potentiometer setting	3		
		AI1 + AI2 setting	4		
		Multi-speed operation setting	5		
		STD control setting	6		
		Remote communications setting	7		
Select the inverter frequency command input channels, there are eight kinds of given frequency channels: 0: Keyboard setting: to achieve by modifying function code F0.01 "keyboard set frequency" value. 1: Analog AI1 setting					

Code	Parameter name	Setting range		Factory default	Change
2: Analog AI2 setting 3: Panel potentiometer setting Refers to that the frequency is determined by the analog input terminals, ST130 inverter is equipped with standard two-way analog input terminals (AI1, AI2), AI1/AI2 voltage and current optional (0V to 10V/0mA to 20mA), it can be switched by the jumpers JP2 and JP3 on control panel. The corresponding relationship between AI1, AI2 input voltage value and the target frequency can be set through F1 function code by user. Panel potentiometer analog input voltage of 0V to 10V. 4: Analog AI1 + AI2 setting: refers to that the frequency is set by the analog input terminals. Note: when the analog AI1/AI2 is selected as 0 to 20mA input, the voltage corresponding to 20mA is 10V 5: Multi-speed operation setting: when multi-speed operation setting mode is selected, the inverter will run at multi-speed mode. Select current stage through setting multi-speed terminal combinations of F1 group; determine the running frequency of current stage through parameters of E1 group. 6: STD control setting: when STD control setting mode is selected, the inverter will run at STD control mode. At this point, you need to set E2 group "STD function group". The inverter's operation frequency is the frequency value after STD function is applied. Where the meanings on STD given source, given quantity and feedback source, etc. Please refer to the introduction of E2 group "STD function". 7: Remote communication setting: frequency command is set by the host computer through the communication. For details, please refer to F9 group communication protocol.					
F0.03	Keyboard and terminal UP/DOWN setting	valid, and the inverter power failure with data storage	0	0	☆
		valid, and the inverter power failure without data storage	1		
		UP/DOWN setting invalid	2		
		Valid when running, invalid when stop	3		
Set the frequency through keyboard ▲ and ▼ keys and input terminals UP/DOWN (frequency setting increment/frequency setting decrement) function, the setting can be combined with other frequency setting channels. Notably tuning the output frequency is required after completion of the commissioning process in the control system 0: valid, and the inverter power failure with data storage You can set the frequency command that the set frequency value is saved after the inverter with power failure. the set frequency will restored to the frequency at the last power-down when the inverter power-down and power-up again. 1: valid, and the inverter power failure without data storage You can set the frequency command that the set frequency value is not saved after the inverter with power failure.					

Code	Parameter name	Setting range		Factory default	Change
2: UP/DOWN setting is invalid, keyboard ▲ and ▼ keys and input terminals UP/DOWN function is invalid. 3: Set keyboard ▲ and ▼ keys and terminal UP/DOWN function setting as valid when running, set keyboard ▲ and ▼ keys and input terminals UP/DOWN setting as not save when stop. Note: after user restores the default value of function parameters of the inverter, the frequency value set by keyboard and input terminals UP/DOWN function is the factory setting value.					
F0.04	Command source channel	Keyboard command channel	0	0	★
		Terminal command channel	1		
		Communication command channel	2		
Select inverter control command channel. Inverter control command include: start, stop, forward, reverse, jog and fault reset,etc. 0: keyboard command channel; RUN, STOP/RESET keys on keyboard is used to run commands 1: terminal command channel; multi-function input terminal forward, reverse, forward jog and reverse jog, etc is used to run commands. 2: communication command channel; the host computer runs commands through the communication method.					
F0.05	Acceleration time 1	0.1 to 3600.0s		Depends on models	☆
F0.06	Deceleration time 1	0.1 to 3600.0s		Depends on models	☆

Acceleration time: refers to the time required that the inverter accelerates from 0Hz to maximum output frequency (F0.08) ;
Deceleration time: refers to the time required that the inverter decelerates from maximum output frequency (F0.08) to 0Hz.
Actual deceleration time = preset acceleration and deceleration time × (set frequency/maximum frequency)

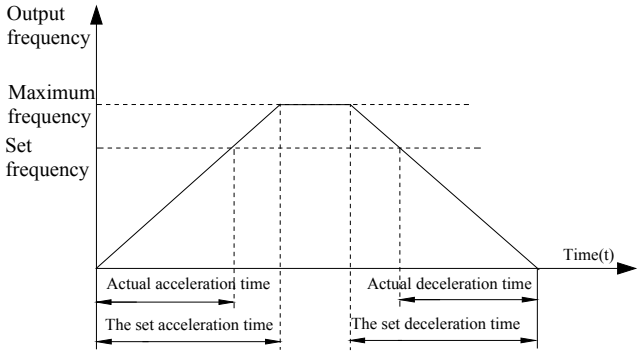

Code	Parameter name	Setting range	Factory default	Change
Acceleration and deceleration time schematic that the set frequency is less than the maximum frequency. ST130 series inverter has two groups of deceleration time. First group: F0.05, F0.06; second group: F7.03, F7.04 Acceleration and deceleration time can be selected by using the multi-function input terminals (F1 group) . The fault value of acceleration and deceleration time is the first group.				
F0.07	Carrier frequency setting	1.0 to 15.0kHz	Depends on models	☆

Carrier Frequency	Electromagnetic noise	Noise, leakage current	Cooling degree
1kHz	Large	Small	Small
10kHz			
15kHz	Small	Large	Large

Carrier frequency pair impact diagram

The advantage of high carrier frequency: there are more ideal current waveform, less current harmonics and less motor noise.
The disadvantage of high carrier frequency: switching loss increases, the inverter temperature increases, the inverter output is affected, the inverter derates under high carrier frequency; the leakage current of the inverter increases, the electromagnetic interference on external increases.
The low carrier frequency has contrary the case described above, the too low carrier frequency will cause the instability of low frequency operation, the torque reduction even oscillation.
The inverter has been set reasonably before leaving factory. Under normal circumstances, user does not need change the parameters.
If the frequency that user uses is more than the default carrier frequency, the derating is required, derating 20%. each increasing of 1K carrier frequency

F0.08	Maximum output frequency	10.00 to 400.00Hz	50.00Hz	★
Maximum output frequency is used to set the maximum output frequency of inverter. User shall note that it is the basis of frequency setting, as well as the basis for the speed of acceleration and deceleration.				
F0.09	Upper limit frequency setting source selection	Keyboard settings (F0.10) 0 Analog AI1 setting 1	0	☆

Code	Parameter name	Setting range		Factory default	Change
		Analog AI2 setting	2		
		Multi-speed setting	3		
		Remote communications setting	4		
To define the setting mode for upper limit. The upper limit frequency can be set from either digital setting (F0.10), also from analog input channels, multi-speed setting or communication settings. When the analog input setting, multi-speed setting or communication setting is set to upper limit frequency, the analog input setting 100% corresponds to F0.08 (maximum output frequency) .					
F0.10	Running frequency upper limit	F0.11 to F0.08 (maximum output frequency)		50.00Hz	☆
Running frequency upper limit is the upper limit of the inverter output frequency. The value should be less than or equal to the maximum output frequency.					
F0.11	Running frequency lower limit	0.00Hz to F0.10 (running frequency upper limit)		0.00Hz	☆
Running frequency lower limit is the lower limit of the inverter output frequency. When the set frequency is less than the frequency lower limit, the frequency lower limit will be adopted for running. Note: maximum output frequency ≥ frequency upper limit ≥ frequency lower limit.					
F0.12	Running direction selection	0: default 1: opposite 2: reverse prohibited		0	★
0: default After the inverter is powered on, it runs at the actual direction. 1: opposite Used to change the motor rotation, which acts to change the motor direction of rotation by adjusting any two motor wires. 2: reverse prohibited Used to prohibit reverse running of the inverter for the specific occasions. Note: after the parameter is initialized, the motor running direction will be restored to its original status. When the system debugging is completed, please use with caution where the change of motor steering is strictly prohibited					
F0.13	AVR function selection	Invalid	0	1	☆
		Full valid	1		
		Only invalid during deceleration	2		
AVR function that automatically adjusts the output voltage function. When AVR function is disabled, the output voltage will vary with the change of the input voltage (or DC bus voltage) ; when AVR function is enabled, the output voltage will not vary with the change of the input voltage (or DC bus voltage), the output voltage remains substantially constant within the range of output capacity.					

5-2-3.F1 Gruop - Input terminals group

Code	Parameter name	Setting range	Factory default	Change
F1.00	DI1 terminal function selection	0: No function 1: Forward run (FWD) 2: Reverse run (REV) 3: Three-wire operation control 4: Forward Jog 5: Reverse Jog 6: Frequency setting increment (UP) 7: Frequency setting decrement (DOWN) 8: Free stop 9: Fault reset 10: External fault input 11: Frequency change settings clear 12: Multi-speed terminal 1 13: Multi-speed terminal 2 14: Multi-speed terminal 3 15: Multi-speed terminal 4 16: Ac/deceleration time selection 17: Control command switch terminal 18: Ac/deceleration prohibited 19: STD control pause 20: Wobbulate pause (stops at the current frequency) 21: Wobbulate reset (returns to the center frequency) 22: Torque control prohibited 23: Frequency change settings temporarily clear 24: Stop DC braking 25: Reserved	1	★
F1.01	DI2 terminal function selection		2	★
F1.02	DI3 terminal function selection		8	★
F1.03	DI4 terminal function selection		9	★
F1.04	DI5 terminal function selection		4	★
F1.05	Reserved			

This parameter is used to set functions of digital multi-function input terminals.
0: No function
1: Forward run (FWD)
2: Reverse run (REV)
External terminals are used to control the FWD/REV run mode of inverter.
3: Three-wire operation control: this terminal is used to determine the three-wire operation control mode of the inverter;For details, see the introduction of F1.06 three-wire function code.

Code	Parameter name	Setting range	Factory default	Change

4: Forward Jog
5: Reverse Jog
For the specific Jog running frequency and Jog Ac/deceleration time, please see the instructions of F7.00 to F7.02 function code.
6: Frequency setting increment (UP)
7: Frequency setting decrement (DOWN)
Modify frequency increment/decrement command when the frequency is referenced by external terminal. Adjust up/down the set frequency when the digital setting is selected as the frequency source.
8: Free stop: once command is enabled, the inverter immediately blocks output but can not control the process of motor stop, the mode is recommended for the application of large inertia load and no requirement for stop time, the mode is same as the free stop described in F3.05.
9: Fault reset: external fault reset function for remote fault reset, it has same function as the STOP/RESET key on the keyboard.
10: External fault input: when this signal is active, the inverter will report external faults (E.SET) and stop.
11: Clear frequency change setting: modify setting frequency by using external terminals, UP as increment command, DOWN as decrement command, the function is used to clear the frequency value set by UP/DOWN so that setting frequency gets back to the frequency set by the frequency command channel.
12,13,14,15:the multi-speed terminal 1 to 4 can achieve a 16-speed setting through this combination of four terminals. Note: multi-speed terminal 1 is low, multi-speed terminal 4 is high. See E1 group.

Multi-speed 4	Multi-speed 3	Multi-speed 2	Multi-speed 1
BIT3	BIT2	BIT1	BIT0

16: Ac/deceleration time selection terminals: used to select acceleration and deceleration time group:

Terminals	Ac/deceleration time selection	Parameters
OFF	Ac/deceleration time 1	F0.05、F0.06
ON	Ac/deceleration time 2	F7.03、F7.04

17: Control command switch terminal: when the command source is not from keyboard control, the switching between command source and keyboard control can be archived. For example, if the terminal control (F0.04 = 1) is active, this terminal can switch between terminal control with keyboard control; if communication control (F0.04 = 2) is active, this terminal can switch between communication control and keyboard control.
18: Ac/deceleration prohibited: ensure the inverter is free from external signals affect (except for shutdown command), maintain current output frequency.
19: STD control pause: STD temporary failure, the inverter maintains the current frequency output.
20: Wobbulate pause: the inverter pauses the current output, when the function is

Code	Parameter name	Setting range		Factory default	Change
revoked, the inverter will continue wobbulate at the current frequency. 21: Wobbulate reset: the set frequency of inverter gets back to the center frequency. 22: Torque control prohibited: the Inverter switches from torque control mode to speed control mode. 23: Temporarily clear frequency change setting:the frequency value set by "UP" and "DOWN" keyboard can be cleared when the terminal is connected so that for the set frequency gets back to the frequency set by command channel, return the frequency value set by frequency change setting again when the terminal is disconnected. 24: Stop DC braking: during the process of deceleration stop, when the terminal is connected, the inverter will immediately perform DC braking, the braking state is determined by F3.07 ~ F3.09. 25: Reserved					
F1.06	Terminal control operation mode	Two-wire type control 1	0	0	★
		Two-wire type control 2	1		
		Three-wire type control 1	2		
		Three-wire type control 2	3		

Forward run

This parameter defines four different modes to control inverter operation through external terminals.
0: Two-wire type control 1
Combine ENABLE and direction. This mode is the most commonly used two-wire mode. The forward and reverse running of motor is determined by the defined FWD, REV terminal commands.
1: Two-wire type control 2
Separate ENABLE and direction. FWD defined by this mode is the enable terminals. The direction is determined by the defined REV state.

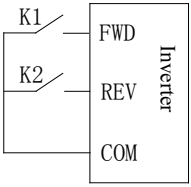

K1	K2	Running command
OFF	OFF	Stop
ON	OFF	Forward run
OFF	ON	Reverse run
ON	ON	Stop

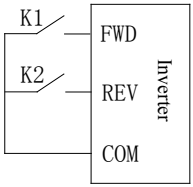

K1	K2	Running command
OFF	OFF	Stop
ON	OFF	Forward run
OFF	ON	Stop
ON	ON	Reverse run

Two-wire type control 1 (Combine ENABLE and direction) Two-wire type control 2 (Separate ENABLE and direction)

2: Three-wire type control 1
In this mode, DIn is as the enable terminal, SB1 as level control is active; the running command is controlled by the pulse rising edge of SB2 or SB3 so as to control forward or reverse of the motor; the stop command is controlled by the switch SB1.
3: Three-wire type control 2
In this mode, DIn is as the enable terminal, SB1 as level control is active; the running command is produced by FWD, SB2 as pulse edge control is active, the running direction of motor is determined by REV, K1 as level control is active.

Code	Parameter name	Setting range	Factory default	Change
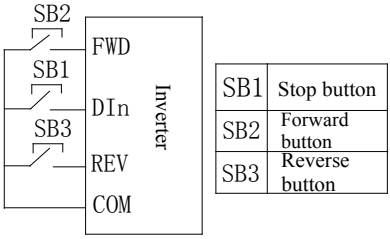 Three-wire control mode 1	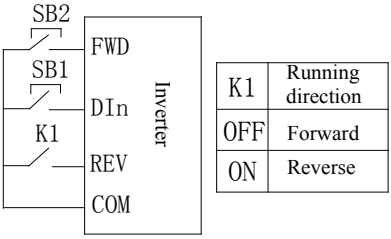 Three-wire control mode 2			
F1.07	Change rate of terminal UP/DOWN frequency increment	0.01 to 50.00Hz/s	0.50Hz/s	☆
When the terminal UP/DOWN is used to adjust the set frequency, the rate of frequency change, i.e. frequency change amount per second.				
F1.08	AI1 lower limit	0.00V to F1.10	0.00V	☆
F1.09	AI1 lower limit setting	-100.0% to 100.0%	0.0%	☆
F1.10	AI1 upper limit	F1.08 to 10.00V	10.00V	☆
F1.11	AI1 upper limit setting	-100.0% to 100.0%	100.0%	☆
F1.12	Filter time of AI1 input	0.00s to 10.00s	0.10s	☆

The above function code defines the relationship between analog input voltage and the analog input, when the analog input voltage exceeds the maximum input or minimum input, the maximum input or the minimum input will be used for calculation.
When the analog input is the current input, 0mA to 20mA current corresponds to 0V to 10V voltage.
In the different applications, the 100.0% of analog setting vary from the meaning of its corresponding nominal value, please refer to the description of each application for details.

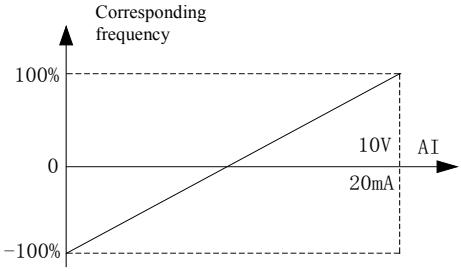

Relationship diagram between analog reference and set amount

AI1 Input filter time: Adjust analog input sensitivity. if this value is increased

Code	Parameter name	Setting range	Factory default	Change
appropriately, the anti-interference of analog will be enhanced, but the analog input sensitivity will be weakened.				
F1.13	AI2 lower limit	0.00V to F1.15	0.00V	☆
F1.14	AI2 lower limit setting	-100.0% to 100.0%	0.0%	☆
F1.15	AI2 upper limit	F1.13 to 10.00V	10.00V	☆
F1.16	AI2 upper limit setting	-100.0% to 100.0%	100.0%	☆
F1.17	Filter time of AI2 input	0.00s to 10.00s	0.10s	☆
AI2 function setting is similar with the way of AI1.				
F1.18	Times of switching quantity filtering	1 to 10	5	☆
Set sampling filter time of DI1 to DI4 terminals. For the application that input terminals are vulnerable to interference and cause the accidental operation, you can increase this parameter so as to enhance the anti-interference ability. However, the increase of filter time will cause DI terminal slow response.				
F1.19	DI terminal mode selection	0x000 to 0x1FF	000	☆

This function code is used to set the polarity of the input terminals. When the bit is set to 0, the polarity of input terminal is positive; when the bit is set to 1, the polarity of input terminal is negative.

Bit0	Bit1	Bit2	Bit3	Bit4
DI1	DI2	DI3	DI4	DI5
Bit5	Bit6	Bit7	Bit8	Bit9
Reserved	Reserved	Reserved	Reserved	Reserved

5-2-4.F2 Group - Output terminals group

Code	Parameter name	Setting range	Factory default	Change
F2.00	MO1 output selection	0 to 10	1	☆
F2.01	Reserved		-	
F2.02	Reserved		-	
F2.03	Relay output selection		1	☆

Set value	Function	Description

Code	Parameter name	Setting range	Factory default	Change
		0: No output 1: Motor is running forward 2: Motor is running reverse 3: Fault output 4: Frequency level detection FDT output 5: Frequency arrival 6: Zero speed running 7: Upper limit frequency arrival 8: Lower limit frequency arrival 9 to 10: Reserved		
F2.04	AO1 output selection	0: Running frequency 1: Set frequency 2: Output current 3: Output torque 4: Output power 5: Output voltage 6: Analog input AI1 value 7: Analog input AI2 value 8: Run speed 9 to 10: Reserved	0	☆

0	No output	The function of Output terminal is disabled.
1	Motor is running forward	Inverter Run Forward: when the inverter runs forward, if the frequency output exists, ON signal will output.
2	Motor is running reverse	Inverter Run Reverse: when the inverter runs reverse, if the frequency output exists, ON signal will output.
3	Fault output	Fault Output: When the inverter occurs failure, and outputs ON signal.
4	Frequency level detection FDT output	For the frequency level detection FDT arrival, please refer to refer to the details on the function code F7.10, F7.11.
5	Frequency arrival	For the frequency arrival, please refer to the details on the function code F7.12.
6	Zero speed running	Zero Speed Running: if the output frequency and the setting frequency of inverter are simultaneously zero, ON signal will output.
7	Upper limit frequency arrival	Upper Limit Frequency Arrival (F0.10) : Outputs ON signal when the operating frequency reaches the upper limit frequency,
8	Lower limit frequency arrival	Lower Limit Frequency Arrival (F0.11) : Outputs ON signal when the operating frequency reaches the lower limit frequency,
9 to 10	Reserved	

The standard analog output is 0 to 20mA (or 0 to 10V), the jumper JP4 can be used to choose current or voltage output. For the corresponding amount, see the below table:

Set value	Function	Description

Code	Parameter name	Setting range	Factory default	Change
0	Running frequency	0 to maximum output frequency		
1	Set frequency	0 to maximum output frequency		
2	Output current	0 to 2 times of rated inverter current		
3	Output torque	0 to 2 times of rated motor current		
4	Output power	0 to 2 times of rated power		
5	Output voltage	0 to 1.2 times of rated inverter voltage		
6	AI1 analog input value	0 to 10V/0 to 20mA		
7	AI2 analog input value	0 to 10V/0 to 20mA		
8	Running speed	0 to 2 times rated motor speed		
F2.05	AO1 output lower limit	0.0% to F2.07	0.0%	☆
F2.06	Lower limit corresponds to AO1 output	0.00V to 10.00V	0.00V	☆
F2.07	AO1 output upper limit	F2.05 to 100.0%	100.0%	☆
F2.08	Upper limit corresponds to AO1 output	0.00V to 10.00V	10.00V	☆

The above function code defines the relationship between output value and analog output, when output value is out of the set maximum output or minimum output, the maximum output or the minimum output will be used for calculation.
When the analog output is the current output, 1mA current is equivalent to 0.5V voltage.
In the different applications, the 100% of analog output value can be different, please refer to the description of each application for details.

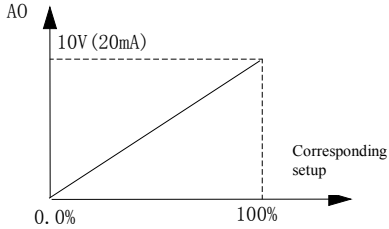

Relationship diagram between analog output and set amount

F2.09 to F2.13	Reserved			
F2.14	DO output terminal active	0x00 to 0x1F	00	☆

Code	Parameter name	Setting range	Factory default	Change
	status selection			

This function code is used to set the polarity of the input terminals. When the bit is set to 0, the polarity of output terminal is positive; when the bit is set to 1, the polarity of output terminal is negative.

Bit0	Bit1	Bit2	Bit3	Bit4
MO1	Reserved	Reserved	R0	Reserved

5-2-5.F3 Group - Start and stop control group

Code	Parameter name	Setting range		Factory default	Change
F3.00	Start running mode	Direct startup	0	0	★
		Speed tracking restart	1		
		First DC braking and then start	2		

0: Directly startup: starts from the start frequency.
1: Speed tracking restart: the inverter identifies the speed that the motor is running, directly tracks and starts from the identified frequencies, the current and voltage smooth and have not impact during starting.
2: First DC braking and then start: firstly DC braking at the method set by F3.03 and F3.04, and then start from the start frequency. Suitable for the occasion of small inertia load and that the reverse running may occur

F3.01	Startup start frequency	0.00 to 10.00Hz	0.50Hz	☆
F3.02	Hold time for start frequency	0.0 to 50.0s	0.0 s	☆

The inverter starts running from the start frequency (F3.01), after the start frequency holding time (F3.02) is passed, and then accelerates up to the target frequency at the set acceleration time, if the target frequency is less than the start frequency, the inverter will enter standby state . The start frequency is not limited by the lower limit frequency.

F3.03	Braking current before start	0.0 to 150.0%	0.0%	☆
F3.04	Braking time before start	0.0 to 50.0s	0.0 s	☆

When DC braking before F3.03 starts, the applied DC current value is as a percentage of the rated inverter current.
F3.04 DC current duration. If the DC braking time is set to 0, then DC braking will be invalid.
The larger DC braking current, the greater braking force.

F3.05	Stop mode selection	Deceleration stop	0	0	☆

Code	Parameter name	Setting range		Factory default	Change
		Free stop	1		
0: Deceleration stop: if stop command is enabled, the inverter will reduce output frequency in accordance with the deceleration method and defined deceleration time, and finally stops when the frequency is reduced to 0Hz. 1: Free stop: if stop command is enabled, the inverter will stop output at once. Load will freely stop according to the mechanical inertia.					
F3.06	Start frequency of stop braking	0.00 to F0.08 (maximum output frequency)		0.00Hz	☆
F3.07	Waiting time of stop braking	0.0 to 50.0s		0.0 s	☆
F3.08	Stop DC braking current	0.0 to 150.0%		0.0%	☆
F3.09	Stop DC braking time	0.0 to 50.0s		0.0 s	☆

Initial frequency of stop braking: if the frequency is arrived when decelerating, DC braking process will start. If the initial frequency of stop braking is 0, DC braking will invalid, the inverter will stop at the set deceleration time.
Waiting time of stop braking: the inverter blocks output before performing stop DC braking, and then starts DC braking again after the delay. Used to prevent the overcurrent fault caused by DC braking at high speed.
Stop DC braking current: refers to the amount of the applied DC braking. The larger the value, the greater the braking torque.
Stop DC braking time: refers to the duration of DC braking.

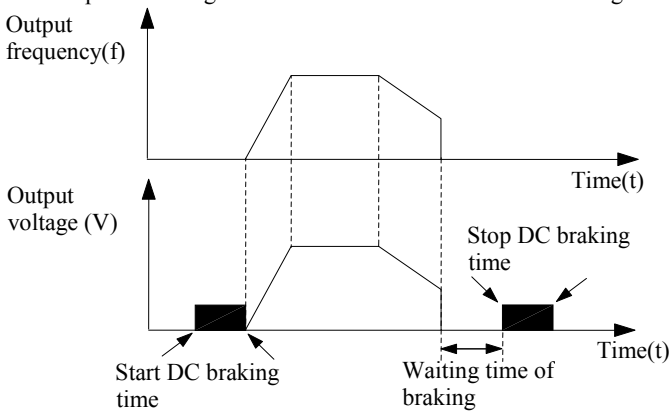

Schematic diagram of DC braking

5-2-6.F4 Group - V/F control group

F4 group of function code is only valid to V/F control, invalid to vector control.

Code	Parameter name	Setting range		Factory default	Change
F4.00	V/F curve setting	Linear V/F curve	0	0	★
		Multi-point V/F curve	1		
		Square V/F curve	2		
		1.75th power V/F curve	3		
		1.25th power V/F curve	4		

0: Linear V/F curve Suitable for ordinary constant torque load.
1: multi-point V/F curve, suitable for dehydrator, centrifuge and other special loads
Any V/F relationship curves can be obtained by setting parameters F4.03 to F4.08.
2: power V/F curve Suitable for fans, pumps and centrifugal loads.
3 to 4: V/F relationship curve between linear V/F and square V/F.

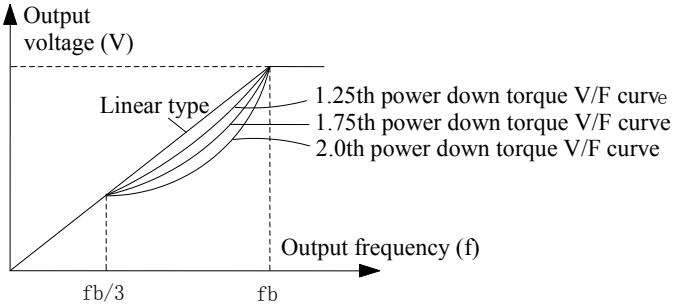

F4.01	Torque boost	0.0%: (Automatic torque boost) 0.1% to 30.0%	0.0%	☆
F4.02	Torque boost cut-off	0.0% to 50.0% (relative to rated motor frequency)	20.0%	★

Torque boost is mainly used in below cutoff frequency (F4.02), V/F curve after boosting is as shown below, the torque boost can improve the characteristics of V/F frequency torque.
Select the amount of torque according to the appropriate load size, the large load can increase the boost, but the boost value should not be set too large, the torque boost is too large, the motor will run over excitation, the inverter output current increases, the motor heats up, and the efficiency is reduced.
When the torque boost is set to 0.0%, the inverter will perform automatic torque boost.
Torque boost cut-off point: below this frequency point, the torque boost is valid, conversely invalid.

Code	Parameter name	Setting range	Factory default	Change
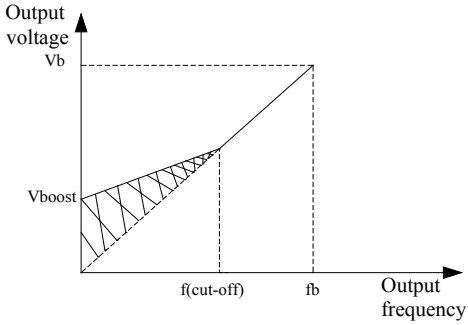 Schematic diagram of manual torque boost voltage				
F4.03	V/F frequency point 1	0.00Hz to F4.05	0.00Hz	★
F4.04	V/F voltage point 1	0.0% to 100.0%	0.0%	★
F4.05	V/F frequency point 2	F4.03 to F4.07	0.00Hz	★
F4.06	V/F voltage point 2	0.0% to 100.0%	0.0%	★
F4.07	V/F frequency point 3	F4.05 to b0.04 (rated moto frequency)	0.00Hz	★
F4.08	V/F voltage point 3	0.0% to 100.0%	0.0%	★

F4.03 to F4.08 six parameters are used to define multi-point V/F curve.
The multi-point V/F curve is set according to the load characteristics of motor, please be noted that the relationship between three voltage points and three frequency points must be meet: V1 <V2 <V3, F1 <F2 <F3. The setting of multi-point V/F curve is as shown in below figure.
In the sate of low frequency, if the voltage is set to a higher value, which may cause motor overheating even burned, the inverter may appear overcurrent stall or overcurrent protection.
V1 to V3: voltage percentage of the 1st to 3rd stages of multi-speed; F1 to F3: frequency percentage of the 1st to 3rd stages of multi-speed; Vb: motor rated voltage; Fb motor rated operating frequency.

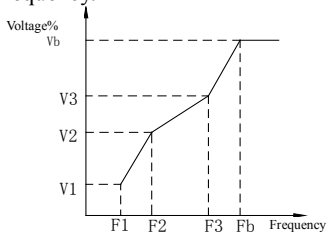

Code	Parameter name	Setting range	Factory default	Change
F4.09	V/F slip compensation limit	0.0 to 200.0%	0.0%	☆
This parameter can compensate for the changes of motor speed due to the load is applied during V/F control, so as to improve the mechanical properties of the motor hardness. This value should be set to the rated slip frequency of motor, the rated slip frequency is calculated as follows: Rated slip frequency = FB-n * p/60 Where: FB is for the motor rated frequency, its corresponding function code is b0.04, n is the motor rated speed, its corresponding function code b0.05, P is the number of motor pole pairs.				

5-2-7.F5 Group - Vector control group

F5 function code is only valid to vector control, invalid to V/F control

Code	Parameter name	Setting range	Factory default	Change
F5.00	Speed loop proportional gain 1	0 to 100	20	☆
F5.01	Speed loop integral time 1	0.01 to 10.00s	0.50 s	☆
F5.02	Switching low point frequency	0.00Hz to F5.05	5.00Hz	☆
F5.03	Speed loop proportional gain 2	0 to 100	15	☆
F5.04	Speed loop integral time 2	0.01 to 10.00s	1.00 s	☆
F5.05	Switching high point frequency	F5.02 to F0.08 (maximum output frequency)	10.00Hz	☆
The above parameters apply only to the vector control mode. Below switching frequency 1 (F5.02), speed loop ST parameters: F5.00 and F5.01. Above switching frequency 2 (F5.05), speed loop ST parameters: F5.03 and F5.04. Between the two, ST parameters are obtained by the linear changes of two sets of parameters, as shown below:				

Code	Parameter name	Setting range	Factory default	Change

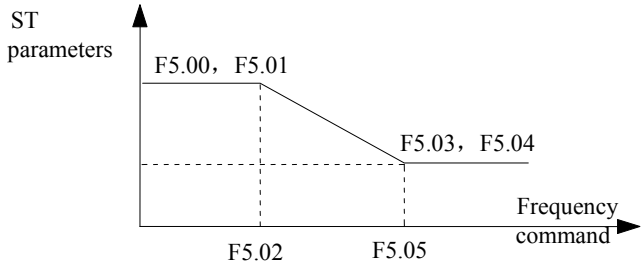

Schematic diagram of ST parameters

By setting the proportional coefficient and integral time of speed regulator, you can adjust the characteristics of speed loop dynamic response of vector control. Increasing the proportional gain as well as decreasing integral time, which can accelerate the speed loop dynamic response, but the too large proportional gain is or the too small integration time easily cause system oscillation and too large overshoot. The too small proportional gain also easily lead to the system steady-state oscillation, and the speed static difference may exist.

Speed loop ST parameters are closely related to and the inertia of system, shall be adjusted based on the default ST parameters especially for different load needs, in order to meet the needs of a variety of occasions.

F5.06	VC slip compensation coefficient	50% to 200%	100%	☆

Slip compensation coefficient is used to adjust the slip frequency of vector control, improve the accuracy of system speed control, if the parameter is appropriately adjusted, the speed static difference can be effectively suppressed.

F5.07	Torque upper limit setting	0.0 to 200.0% (rated inverter current)	150.0%	☆

Set the inverter rated output current corresponding to 100.0%.

5-2-8.F6 Group - Keyboard and display group

Code	Parameter name	Setting range		Factory default	Change
F6.00	STOP/RESET key stop function selection	Valid only for panel control	0	0	☆
		Valid for both panel control and terminal control	1		
		Valid for both panel control and communication control	2		
		Valid for all control modes	3		

As for fault reset, STOP/RESET key is valid at any situation.

Code	Parameter name	Setting range	Factory default	Change
F6.01	Running status display parameters selection	0 to 0xFFFF BIT0: Running frequency BIT1: Set frequency BIT2: Bus voltage BIT3: Output voltage BIT4: Output current BIT5: Running speed BIT6: Output power BIT7: Output torque BIT8: STD setting value BIT9: STD feedback value BIT10: Input terminal status BIT11: Output terminal status BIT12: Analog AI1 value BIT13: Analog AI2 value BIT14: Current stage of multi-speed BIT15: Torque set value	03FF	☆
When the inverter is in operation, the parameter display is limited by F6.01, that is 16-bit binary string, if a bit is 1, the parameters corresponding to the bit can be viewed by SHIFT key during operation. If a bit is 0, the parameters corresponding to the bit will not display. To set function code F6.01, a binary number must be converted into a hexadecimal number, and then enter the function code.				
F6.02	Stop status display parameters selection	1 to 0x3FF BIT0: Set frequency BIT1: Bus voltage BIT2: Input terminal status BIT3: Output terminal status BIT4: STD setting value BIT5: STD feedback value BIT6: Analog AI1 value BIT7: Analog AI2 value BIT8: Current stage of multi-speed BIT9: Torque set value. BIT10 to BIT15: Reserved	0FF	☆
The setting on this function is same with F6.01 setting. When ST130 series inverter stops, the parameters display is effected by this function code.				
F6.03	Speed display coefficient	0.1 to 999.9% Mechanical speed = 120 * running frequency * F6.03/number of motor pole pairs.	100.0%	☆
Mechanical speed = 120 * running frequency * F6.03/number of motor pole pairs, this function code is used to correct speed scale display error, has not affect to the actual speed.				

Code	Parameter name	Setting range	Factory default	Change
F6.04 to F6.07	Reserved			

5-2-9.F7 Group - Auxiliary function group

Code	Parameter name	Setting range	Factory default	Change
F7.00	Jog running frequency	0.00 to F0.08 (maximum output frequency)	5.00Hz	☆
F7.01	Jog running acceleration time	0.1 to 3600.0s	Depends on models	☆
F7.02	Jog running deceleration time	0.1 to 3600.0s	Depends on models	☆
Defined the inverter's setting frequency and ac/deceleration time when jogging Jog running start mode: direct start-up, and jog running stop mode: deceleration stop (F3.05 = 0) . Jog running acceleration time refers to the time required that the inverter accelerates from 0Hz to maximum output frequency (F0.08) ; Jog running deceleration time refers to the time required that the inverter decelerates from maximum output frequency (F0.08) to 0Hz.				
F7.03	Acceleration time 2	0.1 to 3600.0s	Depends on models	☆
F7.04	Deceleration time 2	0.1 to 3600.0s	Depends on models	☆
ST130 provides two sets of acceleration and deceleration time. Their meanings are the same, please refer to the instructions on F0.05 and F0.06. Use multi-function digital input terminal DI to set, switch between ac/deceleration 1 and ac/deceleration time 2. For the detailed method, please refer to the instructions on function codes F1.00 to F1.05.				
F7.05	Jump frequency	0.00 to F0.08 (maximum output frequency)	0.00Hz	☆
F7.06	Jump frequency range	0.00 to F0.08 (maximum output frequency)	0.00Hz	☆

Code	Parameter name	Setting range		Factory default	Change
When the set frequency is within the jump frequency range, the actual running frequency will be the boundaries of the jump frequency. The inverter can avoid mechanical resonance point of load by setting jump frequency. This inverter can set 1 jump frequency point. If the jump frequency points are set to 0, this function does not work. 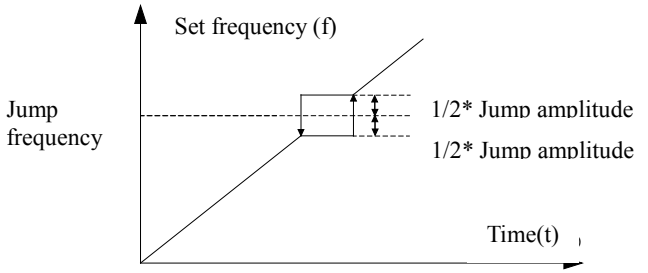 Schematic diagram of jump frequency					
F7.07	Jump frequency availability during ac/deceleration process	Invalid	0	0	☆
		Valid	1		
The function code is used to set whether the jump frequency is active or not in the process of acceleration and deceleration. If it is set to active, when the operating frequency is in the jump frequency range, the actual operating frequency will skip the set jump frequency boundary. 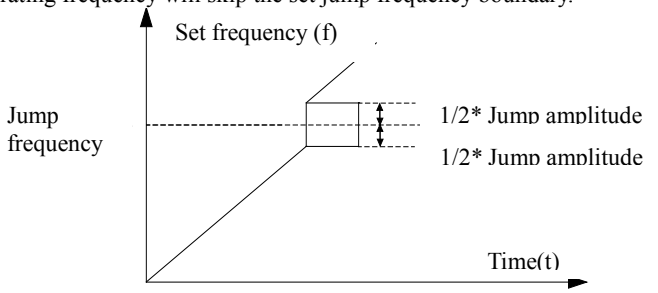 Schematic diagram of jump frequency valid in the process of acceleration.					
F7.08	Forward/reverse rotation deadband	0.0 to 3600.0s		Depends on models	☆

Code	Parameter name	Setting range		Factory default	Change
In the transition process of setting forward and reverse running of inverter, output transition time at zero frequency. 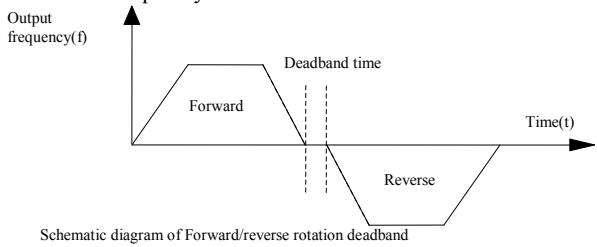 Schematic diagram of Forward/reverse rotation deadband					
F7.09	Power terminals running protection selection	Terminal running command is invalid when it powers on	0	0	☆
		Terminal running command is valid when it powers on	1		
If the running command channel is set to terminal control, the system automatically detects the status of the running terminals when the inverter powers on. Terminal running command is invalid when it powers on. Even if the command terminal is detected as valid when it powers on, the inverter will not run, the system enters the protection stauts until undoing the running command terminal and then enabling the terminal again. Terminal running command is valid when it powers on. Namely that the running command terminal is detected as valid when the inverter powers on, once the initialization is complete, the system will automatically start the inverter. Note that the user must be careful to select the function, it may cause serious consequences.					
F7.10	FDT level detection value	0.00 to F0.08 (maximum output frequency)		50.00Hz	☆
F7.11	FDT hysteresis detection value	0.0 to 100.0% (FDT level)		5.0%	☆

Code	Parameter name	Setting range	Factory default	Change
When the output frequency exceeds a certain set frequency of FDT level, the instruction signal will output until the output frequency falls to below a certain frequency of FDT level (FDT level - FDT hysteresis detection value) . 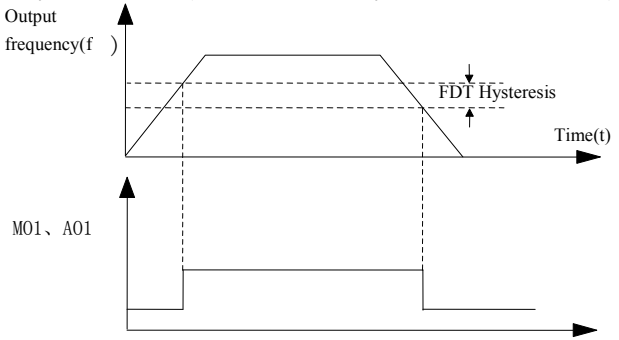 Schematic diagram of FDT level				
F7.12	Frequency reaches detection width	0.0 to 100.0% (Set frequency)	0.0%	☆
When the inverter output frequency outputs pulse signal within the positive and negative of detection width of the set frequency, specifically as shown below: 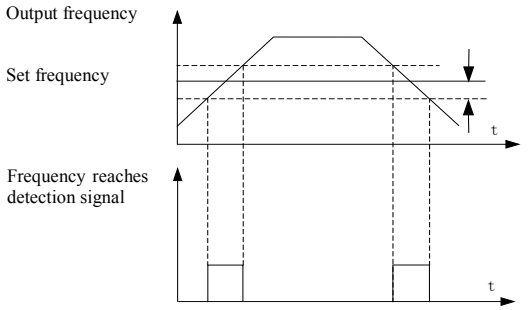 Schematic diagram of frequency arrival detection amplitude				
F7.13	Braking threshold voltage	115.0 to 140.0% (standard bus voltage)	120%	☆
The function code is to set the initial bus voltage of braking, the load can be effectively braked by appropriately adjusting the value.				

5-2-10.F8 Group - Fault and protection group

Code	Parameter name	Setting range	Factory default	Change
F8.00	Automatic current	100 to 200%	160%	☆

Code	Parameter name	Setting range	Factory default	Change
	limiting level			
F8.01	Frequency fall rate at current limiting	0.00 to 100.00Hz/s	10.00Hz/s	☆

During the operation of Inverter, due to the load is too large, the actual rising rate of motor speed is lower than the rising rate of output frequency of, if no measures are taken, it will result in acceleration overcurrent fault and afterwards cause that the inverter trips.
During the operation of inverter, automatic current limiting function detects the output current, and compares with the current limiting point defined by F8.00, and if the output current exceeds the current limiting point, the output frequency of inverter will fall in accordance with the falling rate (F8.01） of over current frequency, when it is detected again that the output current is below the current limiting point, then it resumes normal operation.

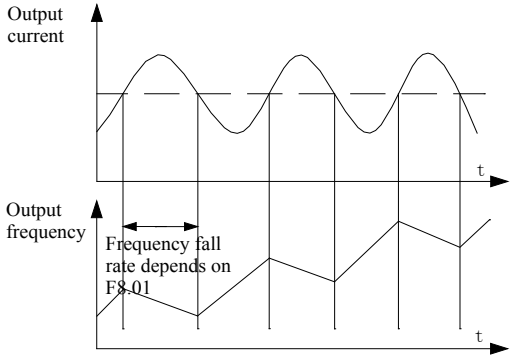

F8.02	Current limiting action selection	Current limiting always valid	0	0	☆
		Current limiting invalid at constant speed	1		

Automatic current limiting function is always valid at the state of acceleration and deceleration, automatic current limiting action selection (F8.02) is used to determine whether automatic current limiting function is valid or not at constant speed.
F8.02 = 0 indicates that automatic current limiting is valid at constant speed;
F8.02 = 1 indicates that automatic current limiting is invalid at constant speed;
When performing automatic current limiting action, the output frequency may vary, so the automatic current limiting function is not suitable for the occasion that the more stable output frequency at constant speed is required.
When the automatic current limiting function is valid, the lower limit setting may affect the overload capacity of inverter.

F8.03	Motor overload	OFF	0	2	★

Code	Parameter name	Setting range		Factory default	Change
	protection selection	Ordinary motor (with low speed compensation)	1		
		Inverter motor (without low speed compensation)	2		
0: OFF No motor overload protection (be caution), at this time, the inverter has not overload protection to load motor. 1: Ordinary motor (with low speed compensation) As the cooling effect of ordinary motor at low speed gets worse, the corresponding electronic thermal protection value should be adjusted as appropriate, as mentioned here with low compensation, it refers to lower the overload protection threshold of motor that the running frequency is less than 30HZ. 2: Inverter motor (without low speed compensation) Because the cooling function of the inverter dedicated motor is not affected by speed, the low-speed protection adjustment is not required.					
F8.04	Motor overload protection current	20.0% to 120.0% (rated motor current)		100.0%	☆
The formula of motor overload protection current: Motor rated current * F8.04 * 158%, lasts for 10 minutes and then alarms motor overload; Motor rated current * F8.04 * 200%, lasts for 1 minutes and then alarms motor overload;					
F8.05	Overvoltage stall protection	Prohibit	0	0	☆
		Allow	1		
When the inverter decelerates, due to the effects from load inertia, it may occur that the actual falling rate of motor speed is lower than the falling rate of output frequency, at the time the motor will feed back the power to the inverter so that the inverter bus voltage rises, if no measures are taken, the rising of bus voltage will cause the inverter overvoltage fault.					
F8.06	Overvoltage stall protection voltage	110 to 150% (220V series)		115%	☆
Overvoltage stall protection voltage refers to that during the operation, the inverter detects the bus voltage and compares it with the overvoltage stall point defined by F8.06 (relative to a standard bus voltage), if the bus voltage exceeds the overvoltage stall point, the inverter's output frequency will stop droping until that the bus voltage is below detection overvoltage stall point, and then continues to decelerate.					
F8.07	Number of automatic fault reset	0 to 3		0	☆
F8.08	Automatic fault reset interval setting	0.1 to 100.0s		1.0 s	☆

Code	Parameter name	Setting range	Factory default	Change
Number of automatic fault reset: when the inverter selects automatic fault reset, it is used to set the number of times of automatic fault reset. When the times of the inverter continuous reset exceed this value, the inverter fault standby, the manual intervention is required. Automatic fault reset interval setting: choose interval between fault occurrence and automatic reset.				
F8.09	Descending frequency point of momentary power failure	70.0 to 110.0% (standard bus voltage)	80.0%	☆
F8.10	Frequency fall rate of momentary power failure	0.00Hz/s to F0.08 (maximum output frequency)	0.00Hz/s	☆

5-2-11.F9 Group - Communication parameter group

Code	Parameter name	Setting range		Factory default	Change
F9.00	Communication baud rate setting	1200bps	0	3	☆
		2400bps	1		
		4800bps	2		
		9600bps	3		
		19200bps	4		
		38400bps	5		
This parameter is used to set the data transfer rate between the host computer and the inverter. Note: the baud rate must be set to the same for the host computer and the inverter, otherwise communication can not be achieved. The larger baud rate, the faster communication speed.					
F9.01	Data bits parity settings	0: no parity (N, 8, 1) for RTU 1: even parity (E, 8, 1) for RTU 2: odd parity (O, 8, 1) for RTU 3: no parity (N, 8, 2) for RTU 4: even parity (E, 8, 2) for RTU 5: odd parity (O, 8, 2) for RTU 6: no parity (N, 7, 1) for ASCII 7: even parity (E, 7, 1) for ASCII 8: odd parity (O, 7, 1) for ASCII 9: no parity (N, 7, 2) for ASCII		1	☆

Code	Parameter name	Setting range	Factory default	Change
		10: even parity (E,7,2) for ASCII 11: odd parity (O,7,2) for ASCII 12: no parity (N,8,1) for ASCII 13: even parity (E,8,1) for ASCII 14: odd parity (O,8,1) for ASCII 15: no parity (N,8,2) for ASCII 16: even parity (E,8,2) for ASCII 17: odd parity (O,8,2) for ASCII		
Note: the set data for the host computer and the inverter must be the same.				
F9.02	Communication address of this unit	1 to 247, 0 for broadcast address	1	☆
When the master is in the write-frame, the communication address of the slave is set to 0, that is the broadcasting communication address, all slaves on MODBUS will accept the frame, but the slave does not respond. Note that the slave's address can not be set to 0. The communication address of this unit has uniqueness in the communication network, which is the basis of peer-to-peer communication for the host computer and the inverter.				
F9.03	Communication response delay	0 to 200ms	5ms	☆
Response delay: it refers to the interval time from the end of the inverter receiving data to the start of it sending response data to the host machine. If the response delay is less than the system processing time, then the response delay time is subject to the system processing time; If the response delay is longer than the system processing time, after the system finises the data processing, and continues to wait until the response delay time, and then sends data to the host computer.				
F9.04	Communication timeout fault time	0.0 (invalid) ; 0.1 to 100.0s	0.0 s	☆
Communication time-out parameter is not valid when the function code is set to 0.0s. When the function code is set to valid, if the interval time between one communication and the next communication exceeds the communication time-out time, the system will report communication failure error (E.CE) . Generally, it is set to invalid. If the parameter can be set to monitor the communication				

Code	Parameter name	Setting range		Factory default	Change
status in continuous communication system.					
F9.05	Data transfer format selection	0: non-standard MODBUS protocol 1: standard MODBUS protocol 2: ASCII		0	☆
F9.06	Transmission error handling	Alarm and free stop	0	1	☆
		No alarm and continue to run	1		
		No alarm and stop at the selected mode (Communication control mode only)	2		
		1: No alarm and stop at the selected mode (All control mode)	3		
In exceptional circumstances, the inverter can shield E.CE fault, stop or contiune running by setting the action of handling communication error.					
F9.07	Transmission response handling	0: Write operations responded 1: Write operations not responded		0	☆
When units digit of the function code LED is 0, the host computer of inverter responds both write and read commands. When units digit of the function code LED is 1, the host computer of inverter responds read command only, this way can improve communication efficiency. When tens digit of the function code LED is 0, the inverter will not save the set value at power failure.					

5-2-12.FA Group - Torque control group

Code	Parameter name	Setting range		Factory default	Change
FA.00	Torque setting mode selection	Keyboard settings (FA.01)	0	0	☆
		Analog AI1 setting (100% relative to 2 times of rated inverter current)	1		
		Analog AI2 setting (same as 1)	2		
		Panel potentiometer setting (same as 1)	3		
		Analog AI1 + AI2 setting (same as 1)	4		

Code	Parameter name	Setting range		Factory default	Change
		Multi-speed setting (same as 1)	5		
		Remote communications setting (same as 1)	6		

Only when F0.00 = 3, both torque control and FA.00 function code are valid. Under torque control mode, the inverter outputs torque according to the set output torque command, the output frequency is limited by upper limit frequency, when the load speed is greater than the set upper limit frequency, the inverter output frequency will be limited, at the time the output torque is different from the set torque.

When the torque command is set by the keyboard (FA.00 = 0), the torque command can be obtained from setting the function code FA.01. When the torque is set to negative, the motor will reverse. Analog, multi-speed and communication settings, the set 100.0% corresponds to two times of rated inverter current and the set -100.0% corresponds to negative 2 times of rated inverter current.

The multi-function input terminals are used to switch between torque control and speed control.

When the set torque of inverter is greater than the load torque, the inverter output frequency will rise, when the inverter output frequency reaches the upper limit of the frequency, the inverter will run at the upper limit frequency.

When the set torque of inverter is less than the load torque, the inverter output frequency will fall, when the inverter output frequency reaches the lower limit of the frequency, the inverter will run at the lower limit frequency.

Note: In the state of stop, the inverter automatically switches from torque control to speed control.

FA.01	Keyboard set torque	-200.0% to 200.0% (rated inverter current)	50.0%	☆

5-2-13.Fb Group - Control optimization group

Code	Parameter name	Setting range	Factory default	Change
Fb.00	Software overcurrent point	4 to 2000A	Depends on models	★
Fb.01	Software undervoltage point	0 to 500V	Depends on models	★
Fb.02	Software overvoltage point	300 to 800V	Depends on models	★
Fb.03	Low-frequency threshold point of oscillation suppression	0 to 500	5	☆
Fb.04	High-frequency threshold point of oscillation suppression	0 to 500	100	☆

But most of the motors that run at certain frequency range occur current shocks, sometime the motor can not run steadily, even it can lead to the inverter overcurrent. When Fb.07 = 0, the oscillation suppression is enabled; if Fb.03, Fb.04 is set to very small, both the effect of oscillation suppression and the increase of current are more

Code	Parameter name	Setting range	Factory default	Change
obvious, conversely, the effect of oscillation suppression is very week.				
Fb.05	Amplitude limit value of oscillation suppression	0 to 10000	5000	☆
The large voltage boost value of oscillation suppression can be restricted by setting Fb.05				
Fb.06	Demarcation frequency of high and low frequency of oscillation suppression	0.00Hz to F0.08 (maximum output frequency)	12.50Hz	☆
Fb.06 is the demarcation point of function code Fb.03 and Fb.04.				
Fb.07	Oscillation suppression	Oscillation suppression valid 0 Oscillation suppression invalid 1	1	☆
The oscillation suppression is for VF control, the current oscillation phenomena often occurs when the ordinary motor runs with light load or no load, which can cause abnormal operation of motor or even the overcurrent of inverter. When Fb.07 = 0, the oscillation suppression will be enabled;the inverter will suppress the oscillation of motor according to the parameters of Fb.03 to Fb.06 function group.				
Fb.08	PWM selection	PWM mode 1 0 PWM mode 2 1 PWM mode 3 2	0	★
PWM mode 1: V/F control is less than 8Hz as the seven-stage type, greater than 12Hz as the five-stage type. PWM mode 2: V/F control fully uses the seven-stage type. PWM mode 3: V/F control fully uses the five-stage type.				
Fb.09	Energy-saving selection	OFF 0 Auto energy-saving 1	0	★
When the motor runs at constant speed with no load or light load, the inverter detects the load current, adjusts the output voltage, in order to automatically save energy.				
Fb.10	Deadband time	2 to 5	Depends on models	

5-2-14.E0 Group - Wobbulate control group

Code	Parameter name	Setting range	Factory default	Change
E0.00	Wobbulate range	0.0 to 100.0% (relative to the set frequency)	0.0%	☆
E0.01	Sudden jump frequency range	0.0 to 50.0% (relative to the wobble amplitude)	0.0%	☆
E0.02	Wobbulate rise time	0.1 to 3600.0s	5.0 s	☆
E0.03	Wobbulate fall time	0.1 to 3600.0s	5.0 s	☆

Wobbulate function is suitable for the textile, chemical, and other industries, as well as occasions that needs traverse and winding function. As shown in Figure 5-15 Wobbulate function means that the inverter output frequency swings up and down to set the frequency centering around the set frequency, the locus the operating frequency on the timeline is as shown in figure, which the swing amplitude is set by E0.00, when E0.00 is set to 0, the wobbulate will not work.

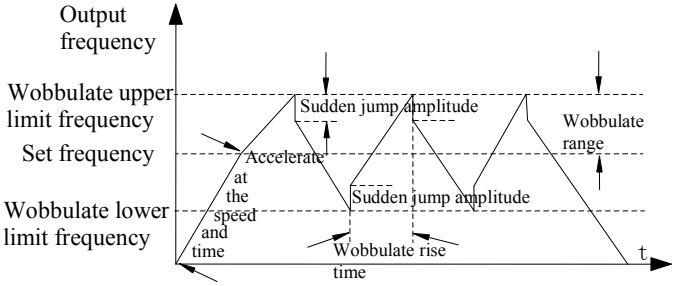

Figure 5-15 Wobbulate Operation Schematic

Wobbulate amplitude: the frequency of wobbulate operation is restricted by the upper and lower frequencies.
Amplitude is relative to the center frequency (the set frequency) : Swing AW = center frequency × Swing range E0.00.
Sudden jump frequency = Swing (AW) ×Sudden jump frequency range (E0.01), that is the value that sudden jump frequency i relative to swing in the state of wobbulate operation.
Wobbulate rise time: the time passed from the lowest point to the highest point
Wobbulate fall time: the time passed from the highest point to the lowest point

5-2-15.E1 Group - Multi-speed control group

Code	Parameter name	Setting range	Factory default	Change
E1.00	Multi-speed 0	-100.0% to 100.0%	0.0%	☆
E1.01	Multi-speed 1	-100.0% to 100.0%	0.0%	☆
E1.02	Multi-speed 2	-100.0% to 100.0%	0.0%	☆

Code	Parameter name	Setting range	Factory default	Change
E1.03	Multi-speed 3	-100.0% to 100.0%	0.0%	☆
E1.04	Multi-speed 4	-100.0% to 100.0%	0.0%	☆
E1.05	Multi-speed 5	-100.0% to 100.0%	0.0%	☆
E1.06	Multi-speed 6	-100.0% to 100.0%	0.0%	☆
E1.07	Multi-speed 7	-100.0% to 100.0%	0.0%	☆
E1.08	Multi-speed 8	-100.0% to 100.0%	0.0%	☆
E1.09	Multi-speed 9	-100.0% to 100.0%	0.0%	☆
E1.10	Multi-speed 10	-100.0% to 100.0%	0.0%	☆
E1.11	Multi-speed 11	-100.0% to 100.0%	0.0%	☆
E1.12	Multi-speed 12	-100.0% to 100.0%	0.0%	☆
E1.13	Multi-speed 13	-100.0% to 100.0%	0.0%	☆
E1.14	Multi-speed 14	-100.0% to 100.0%	0.0%	☆
E1.15	Multi-speed 15	-100.0% to 100.0%	0.0%	☆

The start-stop channel selection is determined by the function code F0.02 under the multi-speed mode, multi-speed process is controlled by the combination of terminal 1, terminal 2, terminal 3 and terminal 4. The relationship of stage and multi-speed is followed as:

The relationship of multi-speed and multi-speed terminal is followed as:

Multi-speed terminal 4	Multi-speed terminal 3	Multi-speed terminal 2	Multi-speed terminal 1	Command setting	Parameters
OFF	OFF	OFF	OFF	Multi-speed command 0	E1.00
OFF	OFF	OFF	ON	Multi-speed command 1	E1.01
OFF	OFF	ON	OFF	Multi-speed command 2	E1.02
OFF	OFF	ON	ON	Multi-speed command 3	E1.03
OFF	ON	OFF	OFF	Multi-speed command 4	E1.04
OFF	ON	OFF	ON	Multi-speed command 5	E1.05
OFF	ON	ON	OFF	Multi-speed command 6	E1.06
OFF	ON	ON	ON	Multi-speed	E1.07

Code	Parameter name	Setting range	Factory default	Change

				command 7	
ON	OFF	OFF	OFF	Multi-speed command 8	E1.08
ON	OFF	OFF	ON	Multi-speed command 9	E1.09
ON	OFF	ON	OFF	Multi-speed command 10	E1.10
ON	OFF	ON	ON	Multi-speed command 11	E1.11
ON	ON	OFF	OFF	Multi-speed command 12	E1.12
ON	ON	OFF	ON	Multi-speed command 13	E1.13
ON	ON	ON	OFF	Multi-speed command 14	E1.14
ON	ON	ON	ON	Multi-speed command 15	E1.15

When multi-speed is selected as frequency source, the 100.0% of function code E1.00 to E1.015 corresponds to maximum output frequency F0.08.
Multi-stage command is used for the function of multi-speed, also for STD setting source to meet the need to switch between different setting values.

5-2-16.E2 Group - STD control group

Code	Parameter name	Setting range		Factory default	Change
E2.00	STD setting source selection	Keyboard setting (E2.01)	0	0	☆
		Analog channel AI1 setting	1		
		Analog channel AI2 setting	2		
		Panel potentiometer setting	3		
		Remote communications setting	4		
		Multi-speed setting	5		

When STD is selected as the frequency source, that is to choose 6 for F0.02, the group function will be enabled. This parameter is used to select the process STD target value setting channel.
The amount of process STD setting target is a relative value, the set 100% corresponds to the 100% of feedback signal of the controlled system.
The system always operate in relative value (0 to 100.0%) .
Note: The multi-speed setting can be achieved by setting the parameters of E1 group.

Code	Parameter name	Setting range		Factory default	Change
E2.01	Keyboard preset STD setting	0.0% to 100.0%		50.0%	☆
When select E2.00 = 0, that is the target source is from keyboard setting, you need to set this parameter. The reference value for this parameter is the amount of system feedback.					
E2.02	STD feedback source selection	Analog channel AI1 feedback	0	0	☆
		Analog channel AI2 feedback	1		
		Panel potentiometer feedback	2		
		AI1-AI2 feedback	3		
		Remote communications feedback	4		
		AI1 + AI2 feedback	5		
		MAX (|AI1|,|AI2|)	6		
		MIN (|AI1|,|AI2|)	7		
This parameter is used to select the STD feedback channel. Note: the setting channel and the feedback channel can not overlap, or, STD can not be effectively controlled.					
E2.03	STD output selection	STD output as positive	0	0	☆
		STD output as negative	1		
STD output as positive, when the feedback signal is greater than STD setting, the inverter output frequency is required to drop in order to balance STD. Such as winding tension STD control. STD output as negative, when the feedback signal is greater than STD setting, the inverter output frequency is required to rise in order to balance STD. Such as unwinding tension STD control.					
E2.04	Proportional gain (KP)	0.00 to 100.00		1.00	☆
E2.05	Integration time (Ti)	0.01 to 10.00s		0.10s	☆
E2.06	Differential time (Td)	0.00 to 10.00s		0.00 s	☆

Code	Parameter name	Setting range	Factory default	Change
Proportional gain (KP) : used to decide the extent of the STD regulator,the greater P,the greater adjusting extent. This parameter 100 means that when the deviation of STD feedback value and setting value is 100%, the STD regulator will adjust the output frequency command to the maximum output frequency (Ignore the integral and differential actions) . Integration time (Ti) : used to decide the speed that STD regulator adjusts integrally the deviation between feedbacks and settings of STD. The integration time means that when the deviation of STD feedback value and setting value is 100%, the integration regulator (Ignore proportional and derivative actions) will successively adjust to the maximum output frequency (F0.08) for the time. The shorter integration time, the greater extent of integral adjustment Differential time (Td) : used to decide the extent that STD regulator adjusts the deviation between feedbacks and settings of STD. The differential time means that the feedback value changes 100% within the time, the differential regulator will adjust to the maximum output frequency (F0.08) (Ignore proportional and integral action) . The longer differential time, the greater extent of adjustment STD is the most commonly used control method in the process control, and the role of its each part varies, the working principle and the adjusting method is briefly described as follows: Proportional adjustment (P) : When the deviation between feedback and setting exists, as for the adjustment amount that the output is proportional to the deviation, if the deviation is constant, then the adjustment amount will be constant too. Proportional adjustment can respond quickly to changes in the feedback, but simply adopt proportional adjustment, which can not realize the control without difference. The larger proportional gain, the faster the system adjustment, but if the too large proportional gain will cause oscillation. How to adjust: firstly set integration time to very long, and set differential time to zero, simply adopt proportional adjustment to make the system running, then change the setting value to observe the deviation (static difference) between feedback signal and setting amount, if the static difference changes in the direction of setting amount (for example, when increasing setting amount, the feedback amount is always less than setting amount after the system is stable), continue to increase the proportional gain, and vice versa reduce the proportional gain, repeat the above process until the static difference is relatively small (it is hard to achieve zero static difference) . Integration time (I) : when the deviation between feedback and setting exists, the output adjustment amount continuously increases, if the deviation persists, the adjustment amounts will continue to increase until zero deviation. The integration regulator can effectively eliminate static difference. If the action of integration regulator shows too strong, the overshoot occurs repeatedly, the system shows unstable until oscillation. The oscillations caused by too strong integral action is characterized by that the feedback signal bobs and the range of oscillation gradually increases until the oscillation. The integration time parameter adjustment generally descend, gradually adjust the integration time to observe the effect of system adjustment until the system reaches the steady speed requirements. Differential time (D) : when the deviation of feedback and setting changes, as for the adjustment amount that the output is proportional to the deviation, the adjustment amount only have something to do with the direction and size of deviation change, not itself direction and size. The role of differential regulation adjusts according to the changing trends when the feedback signal changes,thereby suppressing the changes of feedback signal. Please use differential regulator with caution, because the differential easily amplify the interference of system, especially the interference of high changes frequency.				
E2.07	Sampling period (T)	0.01 to 100.00s	0.10s	☆
E2.08	STD control deviation limit	0.0 to 100.0%	0.0%	☆

Code	Parameter name	Setting range	Factory default	Change
Sampling period (T) : refers to the sampling period of feedback amount, the regulator operates once each sampling period. The greater sampling period, the slower response. STD control deviation limit: refers to allowable deviation between STD system output value and closed-loop setting value, as shown in figure, STD regulator stops adjustment. The reasonable setting to this function code can adjust the accuracy and stability of STD system. 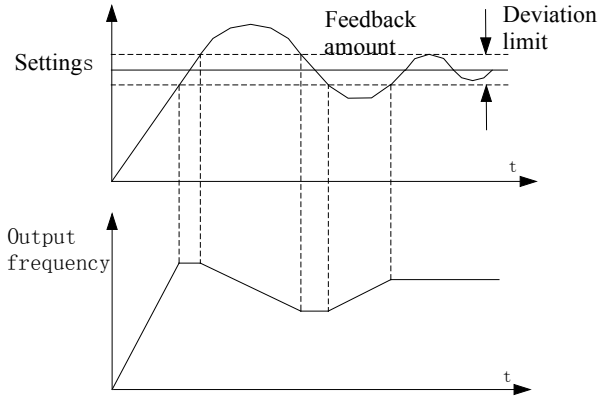 The relationship between deviation limit and output frequency				
E2.09	Feedback disconnection detection value	0.0 to 100.0%	0.0%	☆
E2.10	Feedback disconnection detection time	0.0 to 3600.0s	1.0 s	☆
Feedback disconnection detection value: the detected value is relative to the full scale (100%), the system has been detecting STD feedback, when the feedback value is less than or equal to the feedback disconnection detection value, the system starts to detect timing. When the detection time exceeds the feedback disconnection detection time, the system will report STD feedback disconnection fault (E.STd) .				

5-2-17.E3 Group - Virtual DI, virtual DO group

Code	Parameter name	Setting range	Factory default	Change
E3.00	VDI1 function selection	0 to 25	0	★
E3.01	VDI2 function selection	0 to 25	0	★
E3.02	VDI3 function selection	0 to 25	0	★

Code	Parameter name	Setting range		Factory default	Change
E3.03	VDI4 function selection	0 to 25		0	★
E3.04	VDI5 function selection	0 to 25		0	★
The function of virtual VDI1 to VDI5 is same as DI on the control panel, they can be used as a multi-functional digital inputs, please refer to the introduction of F1.00 to F1.05 for detailed settings.					
E3.05	VDI active mode	Units digit	Virtual VDI1	00000	★
		Invalid	0		
		Valid	1		
		Tens digit	Virtual VDI2 (same as units digit)		
		Hundreds digit	Virtual VDI3 (same as units digit)		
		Thousands digit	Virtual VDI4 (same as units digit)		
		Ten thousands digit	Virtual VDI5		
E3.06	VDI status setting	Units digit	Virtual	11111	★
		The availability of VDI depends on the state of virtual VDOx.	0		
		The availability of VDI depends on the state of function code E3.05.	1		

Code	Parameter name	Setting range		Factory default	Change
		Tens digit	Virtual VDI2 (same as units		
		Hundreds digit	Virtual		
		Thousands digit	Virtual VDI4		
		Ten thousands	Virtual		
It is different from ordinary digital input terminal, the state of virtual VDI has two kinds of setting, the selection depends on E3.06. If the state of selection VDI is determined by the state of corresponding virtual VDO, the availability of VDI depends on the valid or invalid VDO output, and VDIx only binds VDOx (x is 1 to 5) . if the state of selection VDI is set by the function code, the status of virtual input terminals can be determined through E3.05 binary bits respectively. The following example illustrates the use of VDI. Example 1, to achieve the following function: "Upon arrival of running frequency, the inverter will perform free stop" Using the following settings method: set that the VDI state selection depends on VDO, set VDI1 function as "free stop" (E3.00 = 8) ; set that VDI1 terminal active mode depends on VDO1 (E3.06 = xxx0) ; set VDO1 output function as "Frequency Arrival" (E3.11 = 5) ; When the inverter reaches the set frequency, the state of VDO1 is ON, at the time VDI1 input terminal status is valid, if the inverter VDI1 receives the command of free stop, the inverter will perform free stop. Example 2, to achieve the following function: " the inverter is powered on, it					
E3.07	AI1_DI function	0 to 25		0	★
E3.08	AI2_DI function	0 to 25		0	★
E3.09	Panel potentiometer_DI	0 to 25		0	★
E3.10	AI_DI mode	Units digit: AI1 0: high level active 1: low level active Tens digit: AI2 (same as units digit)		000	★

Code	Parameter name	Setting range	Factory default	Change
This function code is used to set AI as DI, when AI is used as DI, when AI input voltage is greater than 7V, AI terminal state is high level, when AI input voltage drops below 3V, AI terminal status is low level. The voltage between 3V to 7V is regarded as the hysteresis, E3.10 is used to determine whether AI high level or low level is active when AI is used as DI. The method of setting AI as DI is same as the ordinary DI setting, please refer to the instructions on DI settings in F1 group.				
E3.11	VDO1 output function	0 to 10	0	☆
E3.12	VDO2 output function	0 to 10	0	☆
E3.13	VDO3 output function	0 to 10	0	☆
E3.14	VDO4 output function	0 to 10	0	☆
E3.15	VDO5 output function	0 to 10	0	☆
E3.16	VDO valid state	Units digit: VDO1 0: positive logic 1: negative logic Tens digit: VDO2 (same as units digit) Hundreds digit: VDO3 (same as units digit)	00000	☆
E3.17	VDO1 delay time	0.0s to 3600.0s	0.0 s	☆
E3.18	VDO2 delay time	0.0s to 3600.0s	0.0 s	☆
E3.19	VDO3 delay time	0.0s to 3600.0s	0.0 s	☆
E3.20	VDO4 delay time	0.0s to 3600.0s	0.0 s	☆
E3.21	VDO5 delay time	0.0s to 3600.0s	0.0 s	☆
VDO is similar with DO output function, which can used with VDIx together to achieve some simple logic control. When VDOx output function is selected as 0, the state of VDO1 to VDO5 output is determined by the state of DI1 to DI5 input on control panel, at this time VDOx corresponds to VDIx fully. When VDOx output function is not set to 0, the setting and using method of VDOx function is same as DO output in F2 group, please refer to related parameter description in F2 group. Similarly VDOx output active state can be set by E3.16, select positive logic or negative logic.				

5-2-18.b0 Group - Motor parameter group

Code	Parameter name	Setting range	Factory default	Change
b0.00	Inverter type	0.G type (constant torque load type) 1: Reserved	0	★
b0.011	Rated motor power	0.4 to 900.0kW	Depends on models	★
b0.02	Rated motor voltage	0 to 460V	Depends on models	★
b0.03	Rated motor current	0.1 to 2000.0A	Depends on models	★
b0.04	Rated motor frequency	0.01Hz to F0.08 (maximum	50.00Hz	★
b0.05	Rated motor speed	0 to 36000rpm	Depends on models	★
Note: please set up according to the motor nameplate parameters. The excellent vector control performance needs the accurate motor parameters. The inverter provides the function of parameter auto tunning. The accurate parameter auto tunning depends on correctly inputing parameters on the motor nameplate. In order to guarantee the control performance, please try to ensure that the inverter power matches the motor power, if the gap between the two is too large, the inverter control performance will be significantly reduced. Note: Resetting the motor rated power (b0.01) will initialize motor parameters b0.06 to b0.10.				
b0.06	Motor stator resistance	0.001 to 65.535Ω	Depends on models	☆
b0.07	Motor rotor resistance	0.001 to 65.535Ω	Depends on models	☆
b0.08	Motor stator and rotor inductance	0.1 to 6553.5mH	Depends on models	☆
b0.09	Motor stator and rotor mutual inductance	0.1 to 6553.5mH	Depends on models	☆
b0.10	Motor no-load current	0.01 to 655.35A	Depends on models	☆
When the motor parameter auto tunning is competed, the set value of b0.06 to b0.10 will be automatically updated. These parameters as the basis of high-performance vector control have a direct impact on the control performance.				

Code	Parameter name	Setting range	Factory default	Change
Note: user should not arbitrarily change the group of parameters.				
b0.11	Motor parameter auto tunning	0: no operation 1: Motor parameters comprehensive auto tunning 2: Motor parameters static auto tunning	0	☆

0: no operation

1: Rotation parameter auto tunning: you must enter the correct motor nameplate parameters (b0.01 ~ b0.05) before motor parameter auto tunning, and disengage the motor and its load so that the motor is in the state of rest or no-load, otherwise the result of motor parameter auto tunning may be incorrect.

Before motor parameter auto tunning, set appropriate acceleration time and deceleration time (F0.05, F0.06) based on the size of the motor inertia, otherwise it may occur overcurrent or overvoltage fault in the process of motor parameter auto tunning.

Set B0.11 to 1 and then press ENTER key to start the state of motor parameter auto tunning, at this time, the LED displays "-TUN-" and flashes, press RUN key to start parameter auto tunning, when "TUN-0 ~ TUN-3 " is displayed, TUN-4 motor starts running. When the parameter auto tunning is completed, display "-END-", and finally return to the stop interface. When "-TUN-" is flashing, press PRG to exit the state of parameter auto tunning.

When performing parameter auto tunning, press STOP/RESET key to terminate the operation of parameter auto tunning.

Note: The start and stop of parameter auto tunning can be only controlled by the keyboard; when parameter auto tunning is completed, this function code automatically returns to 0.

2: Static parameter auto tunning: you do not need to disengage the motor and its load, must enter the correct motor nameplate parameters (b0.01 to b0.05) before motor parameter auto tunning, the resistance value of motor stator will be detected after motor parameter auto tunning. The mutual inductance and the no-load current of motor will not be measured, user can enter the appropriate values based on experience.

5-2-19.y0 Group - Function code management

Code	Parameter name	Setting range	Factory default	Change
y0.00	Function parameter recovery	0: no operation 1: Restore defaults 2: Clear fault history 3: Backup parameters 4: Restore from backup	0	★

Code	Parameter name	Setting range	Factory default	Change
0: no operation 1: The drive restores the default valuesof all parameters. 2: The inverter clears recent failures history. 3: Backup the parameters set by the current user. Backup all function parameters. It is easy to restore the default settings when user incorrectly adjust parameters. 4: Restore user backup parameters Note: This operation is completed, the function code value is automatically restored to 0; b0 group of parameters will not be restored to the default values.				
y0.01	User password	0 to 65535	0	★
When setting to one any non-zero number,the password protection will take effect. 00000: clear old user password, and disable password protection function, restoring the factory defaultare also able to clear password. When user password is set and takes effect, if user password is incorrect, user will not be able to enter parameter menu, only when the correct password is entered, user can view and modify parameters. Keep firmly in mind the set user password. Password protection will take effect 1 minute after exiting from function code edit mode, otherwise inaccessible. PRG ESC at this time, if you want to enter function code edit mode by pressing keys, "0.0.0.0.0" will display, the operator must enter the correct password,				

5-2-20.y1 Group - Fault history search group

Code	Parameter name	Setting range	Factory default	Change
y1.00	Type of the first two faults	0: No fault 1: Inverter unit U-phase protection (E.oUP) 2: Inverter unit V-phase protection (E.oUP) 3: Inverter unit W-phase protection (E.oUP) 4: Acceleration overcurrent (E.oC1) 5: Deceleration overcurrent (E.oC2) 6: Constant speed overcurrent (E.oC3) 7: Acceleration overvoltage (E.oU1) 8: Deceleration overvoltage (E.oU2) 9: Constant speed overvoltage (E.oU3) 10: Bus undervoltage fault (E.LU) 11: Motor Overload (E.oL1)	0	●
y1.01	Type of the first fault		0	●
y1.02	Type of current fault		0	●

Code	Parameter name	Setting range	Factory default	Change
		12: Inverter overload (E.oL2) 16: Inverter module overheating fault (E.oH2) 17: External fault (E.SET) 18: Communication fault (E.CE) 19: Current detection fault (E.oCC) 20: Auto tuning fault (E.tE) 21: EEPROM operation fault (E.EEP) 22: STD feedback disconnection fault (E.STd)		
Record the type of the last three faults of inverter, see the troubleshooting for the details.				
y1.03	Running frequency of		0.00Hz	●
y1.04	Output current of		0.0A	●
y1.05	Bus voltage of current		0V	●
y1.06	Input terminal status of		0	●
y1.07	Output terminal status		0	●

The status of current fault input terminal are decimal digits. Display all digital input terminal status of the last fault, the order is:

Bit0	Bit1	Bit2	Bit3	Bit4
DI1	DI2	DI3	DI4	DI5
Bit5	Bit6	Bit7	Bit8	Bit9
Reserved	Reserved	Reserved	Reserved	Reserved

When the input terminal is ON, the corresponding bit is 1, OFF for 0. This value can be used to understand the state of digital input signal at the sate of failure.
The status of current fault output terminal are decimal digits. Display all digital output terminal status of the last fault, the order is:

Bit0	Bit1	Bit2	Bit3	Bit4
MO1	Reserved	Reserved	R0	Reserved

When the output terminal is ON, the corresponding bit is 1, OFF for 0. This value can be used to understand the state of digital output signal at the sate of failure.

Chapter 6 EMC (Electromagnetic Compatibility)

6-1.Definition

Electromagnetic compatibility refers to the ability that the electric equipment runs in an electromagnetic interference environment and implements its function stably without interferences on the electromagnetic environment.

6-2.EMC Standard

In accordance with the requirements of the Chinese national standard GB/T12668.3, the inverter must comply with the requirements of electromagnetic interference and anti- electromagnetic interference.

Our existing products adopt the latest international standards: IEC/EN61800-3: 2004 (Adjustable speed electrical power drive systems part 3:EMC requirements and specific test methods),which is equivalent to the Chinese national standards GB/T12668.3. EC/EN61800-3 assesses the inverter in terms of electromagnetic interference and anti-electronic interference. Electromagnetic interference mainly tests the radiation interference, conduction interference and harmonics interference on the inverter (necessary for civil inverter)

Anti-electromagnetic interference mainly tests the conduction immunity, radiation immunity, surge immunity, EFTB (Electrical Fast Transient Burs) immunity, ESD immunity and power low frequency end immunity (the specific test items includes: 1. Immunity tests of input voltage sag, interrupt and change; 2.commutation notch immunity; 3. harmonic input immunity ; 4. input frequency change; 5. input voltage unbalance; 6. input voltage fluctuation) . The tests shall be conducted strictly in accordance with the above requirements of IEC/EN61800-3, and our products are installed and used according to the guideline of the Section 7.3 and can provide good electromagnetic compatibility in general industry environment.

6-3.EMC Directive

6-3-1.Harmonic Effect

The higher harmonics of power supply may damage the inverter. Thus, at some places where the quality of power system is relatively poor, it is recommended to install

AC input reactor.

6-3-2.Electromagnetic Interference and Installation Precautions

There are two kinds of electromagnetic interferences, one is the interference from electromagnetic noise in the surrounding environment to the inverter, and the other is the interference from the inverter to the surrounding equipments.

Installation Precautions:

1) The earth wires of the Inverter and other electric products ca shall be well grounded;

2) The power cables of the inverter power input and output and the cable of weak current signal (e.g. control line) shall not be arranged in parallel but in vertical if possible.

3) It is recommended that the output power cables of the inverter shall use shield cables or steel pipe shielded cables and that the shielding layer shall be grounded reliably, the lead cables of the equipment suffering interferences shall use twisted-pair shielded control cables, and the shielding layer shall be grounded reliably.

4) When the length of motor cable is longer than 100 meters, it needs to install output filter or reactor.

6-3-3.Remedies for the interferences from the surrounding electromagnetic equipments to the inverter:

Generally the electromagnetic interference on the inverter is generated by plenty of relays, contactors and electromagnetic brakes installed near the inverter. When the inverter has error action due to the interferences, the following measures is recommended:

1) Install surge suppressor on the devices generating interference;

2) Install filter at the input end of the inverter,please refer to Section 6.3.6 for the specific operations.

3) The lead cables of the control signal cable of the inverter and the detection line shall use the shielded cable and the shielding layer shall be grounded reliably.

6-3-4.Remedies for the interferences from the inverter to the surrounding electromagnetic equipments:

These noise interferences are classified into two types: one is the radiation

interference of the inverter, and the other is the conduction interference of the inverter. These two types of interferences cause that the surrounding electric equipments suffer from the affect of electromagnetic or electrostatic induction. Further,the surrounding equipment produces error action. For different interferences, please refer to the following remedies:

1) Generally the meters, receivers and sensors for measuring and testing have more weak signals. If they are placed nearby the inverter or together with the inverter in the same control cabinet, they easily suffer from interference and thus generate error actions. It is recommended to handle with the following methods: away from the interference source as far as possible; do not arrange the signal cables with the power cables in parallel and never bind them together; both the signal cables and power cables shall use shielded cables and shall be well grounded; install ferrite magnetic ring (with suppressing frequency of 30 to 1,000MHz) at the output side of the inverter and wind it 2 to 3 turns; install EMC output filter in more severe conditions.

2) When the interfered equipment and the inverter use the same power supply, it may cause conduction interference. If the above methods cannot remove the interference, it shall install EMC filter between the inverter and the power supply (refer to Section 6.3.6 for the selection operation) ;

3) The surrounding equipment shall be separately grounded, which can avoid the interference caused by the leakage current of the inverter's grounding wire when common grounding mode is adopted.

6-3-5.Remedies for leakage current

There are two forms of leakage current when using the inverter. One is leakage current to the earth, and the other is leakage current between the cables.

1) Factors of affecting leakage current to the earth and its solutions:

There are the distributed capacitance between the lead cables and the earth. The larger the distributed capacitance,the larger the leakage current;the distributed capacitance can be reduced by effectively reducing the distance

between the inverter and the motor. The higher the carrier frequency,the larger the leakage current. The leakage current can be reduced by reducing the carrier frequency. However, the carrier frequency reduced may result in

the increase of motor noise.Please note that additional installation of reactor is also an effective method to solve leakage current problem.

The leakage current may increase with the increase of circuit current. Therefore, when the motor power is higher, the corresponding leakage current will be higher too.

2) Factors of producing leakage current between the cables and its solutions:

There is the distributed capacitance between the output cables of the inverter. If the current passing lines has higher harmonic, it may cause resonance and thus result in leakage current. If the thermal relay is used, it may generate error action.

The solution is to reduce the carrier frequency or install output reactor. It is recommended that the thermal relay shall not be installed in the front of the motor when using the inverter, and that electronic over current protection function of the inverter shall be used instead.

6-3-6.Precautions on Installing EMC input filter at the input end of power supply

1) Note: when using the inverter, please follow its rated values strictly. Since the filter belongs to Classification I electric appliances, the metal enclosure of the filter and the metal ground of the installing cabinet shall be well earthed in a large area, and have good conduction continuity, otherwise there may be danger of electric shock and the EMC effect may be greatly affected. Through the EMC test, it is found that the filter ground end and the PE end of the inverter must be connected to the same public earth end, otherwise the EMC effect may be greatly affected.

2) The filter shall be installed at a place close to the input end of the power supply as much as possible.

Chapter 7 Troubleshooting

7-1 . Fault message and troubleshooting

No.	Fault code	Failure type	Possible causes	Solutions
1	E.oUP	Inverter unit U-phase fault	1. Accelerated too quickly 2. Internal damage of the phase IGBT 3. Malfunction caused by interference 4. Whether Grounded well or not	1. Increase acceleration time 2. Seek for support 3. Check whether the peripheral devices have strong interference
2	E.oUP	Inverter unit V-phase fault		
3	E.oUP	Inverter unit W-phase fault		
4	E.oC1	Overcurrent when accelerating	1. Accelerated too quickly 2. Mains voltage is low 3. The inverter power is small 4: Output phase loss	1. Increase acceleration time 2. Check input power 3. Choose the inverter with larger power Inverter 4. Check the output wiring
5	E.oC2	Overcurrent when decelerating	1. Decelerated too quickly 2. Load inertia torque is large 3. The inverter power is small 4: Output phase loss	1. Increase deceleration time 2. Add suitable braking components 3. Choose the inverter with larger power 4. Check the output wiring
6	E.oC3	Overcurrent at constant speed	1. Load mutation or abnormal 2. Mains voltage is low 3. The inverter power is small 4: Output phase loss	1. Check load or reduce load mutation 2. Check input power 3. Choose the inverter with larger power 4. Check the output wiring
7	E.oU1	Overvoltage when accelerating	1. Input voltage is abnormal 2. After momentary power failure, restart the motor that is rotating 3. Acceleration time is too short	1. Check input power 2. Avoid re-starting at the state of stop 3. Increase acceleration time

No.	Fault code	Failure type	Possible causes	Solutions
8	E.oU2	Overvoltage when decelerating	1. Decelerated too quickly 2. Large load inertia 3. Input voltage is abnormal	1. Increase deceleration time 2. Increasing braking components of energy consumption 3. Check input power
9	E.oU3	Overvoltage constant speed	1. Input voltage has abnormal changes 2. Large load inertia	1. Install input reactor 2. Add suitable braking components
10	E.LU	Bus undervoltage Shutdown display	1. Mains voltage is low 2. Parameters are set incorrectly 3. Shutdown prompt	1. Check mains input power 2. Check whether parameters are correct
11	E.oL1	Motor Overload	1. Mains voltage is too low 2. Motor rated current is set incorrectly 3. Motor stall or mutation load is too large 4. The big car Mara	1. Check mains voltage 2. Reset rated motor current 3. Check the load, and adjust torque boost 4. Select the appropriate motor
12	E.oL2	Inverter overload	1. Accelerated too quickly 2. Restart the motor that is rotating 3. Mains voltage is too low 4. Overload	1. Increase acceleration time 2. Avoid re-starting at the state of stop 3. Check mains voltage 4. Choose the inverter with larger power
16	E.oH2	Inverter module overheating	1. Instantaneous overcurrent of inverter 2. Output three-phase is interphase or shorted to ground 3. Air duct blockage or damage 4. The ambient temperature is too high 5. The wires or plug-ins of dashboard loosed 6. Auxiliary power supply is damaged, the inverter is undervoltage 7. Straight through of power module bridge 8. The control panel is	1. See the solutions on overcurrent 2. Re-wiring 3. Clean or replace the air duct 4. Decrease the ambient temperature 5. Check and reconnect 6. Seek for service 7. Seek for service 8. Seek for service

No.	Fault code	Failure type	Possible causes	Solutions
			abnormal	
17	E.SET	External fault	External fault input terminal action	Check the external device input
18	E.CE	Communication fault	1. Baud rate is set incorrectly 2. Serial communication error 3. Communication prolonged disruption	1. Set the appropriate baud rate 2. Press stop button to reset, and seek for service 3 Check wiring of the communication interface
19	E.oCC	Current detection circuit fault	1. Bad connection of control board connector 2. Auxiliary power damage 3. Hall device damage 4. Amplification circuit is abnormal	1. Check the connector and re-plug wire 2. Seek for service 3. Seek for service 4. Seek for service
20	E.TE	Motor parameter auto tunning fault	1. The motor's capacity does not match with the inverter's capacity 2. Rated motor parameters is set incorrectly 3. The learned parameters is different from the standard parameters. 4. Auto-tunning timeout	1. Replace the inverter model 2. Set rated parameters according to motor nameplate 3. Run the motor with no load, re-identify 4. Check the motor wiring and parameter setting
21	E.EEP	EEPROM read and write fault	1. Read and write error of control parameters 2. EEPROM damage	1. Press stop button to reset, and seek for service 2. Seek for service
22	E.STd	STD feedback disconnection fault	1. STD feedback disconnection 2. STD feedback source disappeared	1. Check STD feedback signal line 2. Check STD feedback source

Chapter 8 Installation and Spare Circuit

8-1.Operating environment

(1) Ambient temperature -10 ℃ to 40℃.

(2) Prevent electromagnetic interference, and away from interference sources.

(3) Prevent the ingress of droplets, vapor, dust, dirt, lint and metal fine powder.

(4) Prevent the ingress of oil, salt and corrosive gases.

(5) Avoid vibration.

(6) Avoid high temperature and humidity or exposure to rain, humidity shall be less than 90% RH (non-condensing) .

(7) Never use in the dangerous environment of flammable, combustible, explosive gas, liquid or solid.

8-2.Installation Direction andSpace

The inverter shall be installed in the room where it is well ventilated, the wall-mounted installation shall be adopted, and the inverter must keep enough space around adjacent items or baffle (wall) . As shown below figure:

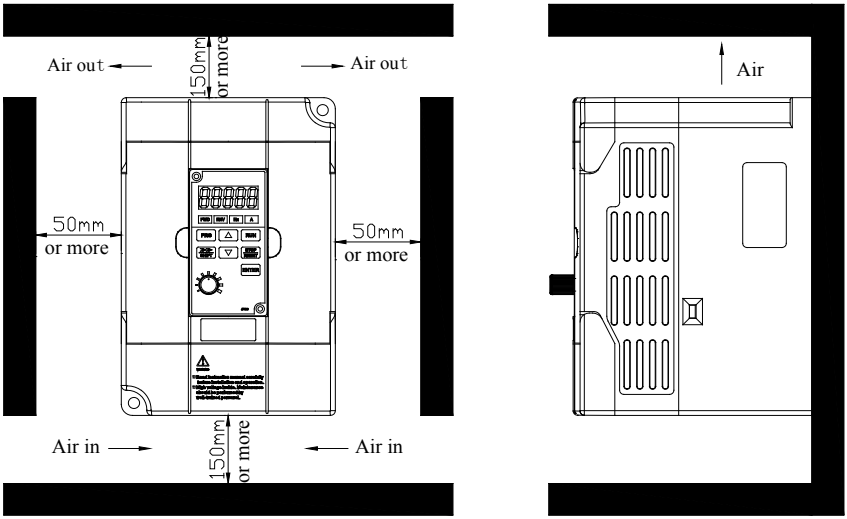

8-3.Wiring diagram

The wiring of inverter is divided into two parts of main circuit and control circuit. User must correctly connect in accordance with the wiring circuit as shown in the following figure.

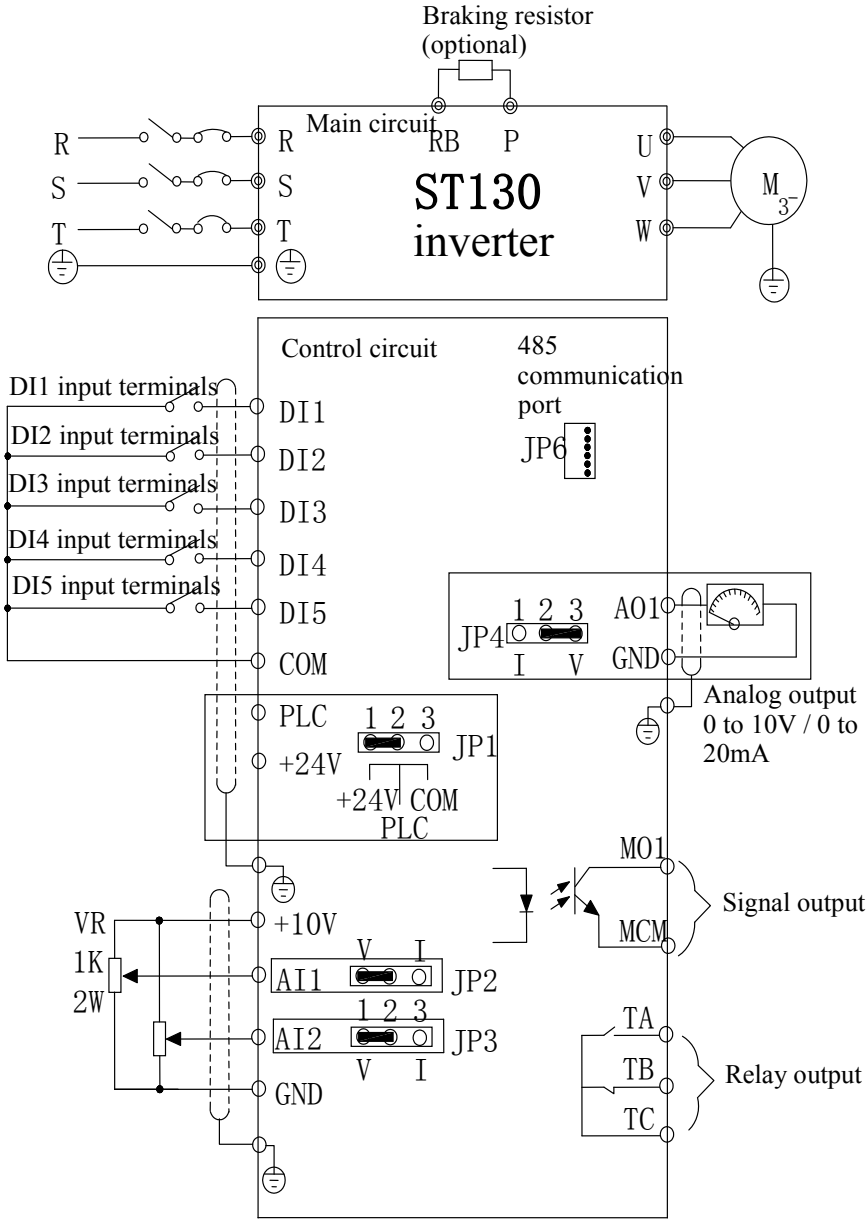
Braking resistor
(optional)
Main circuit
R
S
T
RB
P
U
V
W
ST130
inverter
M
3~
Control circuit
485
communication
port
JP6
DI1 input terminals
DI2 input terminals
DI3 input terminals
DI4 input terminals
DI5 input terminals
DI1
DI2
DI3
DI4
DI5
COM
PLC
+24V
1 2 3
JP1
+24V COM
PLC
1 2 3
JP4
I V
AO1
GND
Analog output
0 to 10V / 0 to
20mA
MO1
MCM
Signal output
VR
1K
2W
+10V
AI1
V I
JP2
AI2
1 2 3
JP3
V I
GND
TA
TB
TC
Relay output

8-4.Main circuit terminal

8-4-1. ST130 main circuit terminal

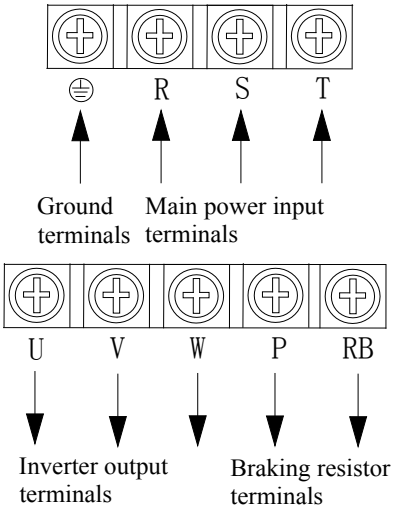

8-4-2.Function Description of Terminals

Terminals	Name	Description
R, S, T	Inverter input terminals	Connection point of AC input power supply, single-phase connects to R, T
⏚	Ground terminals	Ground terminals
P、RB	Braking resistor terminals	Connect to braking resistor
U、V、W	Inverter output terminals	Connect to three-phase motor

8-5.Control circuit terminals

8-5-1. Description of control circuit terminals

Category	Symbol	Name	Function
Power supply	+10V、GND	External +10 Power	Output +10V power supply, maximum output current: 10mA Generally it is used as power supply of external potentiometer, potentiometer resistance range: 1kΩ to 5kΩ.

	+24V、COM	External+24V power supply	Output +24V power supply, generally it is used as power supply of digital input and output terminals and external sensor. Maximum output current: 200mA
	PLC	External power input terminal	When external signal is used to drive, please unplug JP1 jumpers,PLC must be connected to external power supply, and to +24V (default) .
Analog input	AI1、COM	Analog input terminal 1	1.Input range: (DC 0V to 10V/0 to 20mA), depends on the selected JP2 jumper on control panel. 2.Input impedance: 22kΩ with voltage input, 500Ω with current input.
	AI2, COM	Analog input terminal 2	1.Input range: (DC 0V to 10V/0 to 20mA), depends on the selected JP3 jumper on control panel. 2.Input impedance: 22kΩ with voltage input, 500Ω with current input.
Digital input	DI1 TO DI5	Multifunction digital terminals (1 to 5)	1. Opto-coupler isolation, compatible with bipolar input 2. Input impedance: 2.4kΩ 3. Voltage range of level input : 9V to 30V, depends on the selection of JP1 jumper on the control panel.
Analog output	AO1, COM	Analog output terminals 1	The selected JP4 jumper on control panel determines voltage or current output. Output voltage range: 0V to 10V, output current range: 0mA to 20mA
Digital output	MO1, MCM	Output signal 1	Output Open Collector signal MO1, the common terminal is MCM. Output voltage range: 0 to 24V, output current range: 0 to 50mA
Relay output	TA/TB/TC	Output signal 2	Relay output, TA normally open, TB normally closed, TC common terminal, output function is determined by F2.03 setting. Contact capacity: 7A/AC250V

8-5-2.Arrangement of control circuit terminals

1. ST130MCB board control circuit terminal

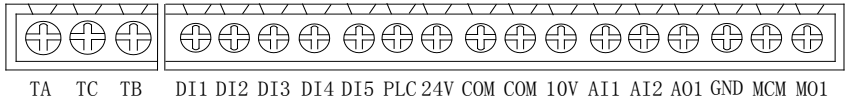

8-6.Wiring Precautions:

※ The U, V, W output end of inverter can not install phase advancing capacitor or RC absorbing device. The inverter input power must be cut off when replacing the motor

※ Do not let metal chips or wire ends into inside the inverter when wiring,otherwise which may cause malfunction to the inverter.

※ Disconnect motor or switch power-frequency power supply only when the inverter stops output

※ In order to minimize the effects of electromagnetic interference,it is recommended that a surge absorption device shall be installed additionally when electromagnetic contactor and relay is closer from the inverter.

※ External control lines of inverter shall adopt isolation device or shielded wire.

※ In addition to shielding, the wiring of input command signal should also be aligned separately, it is best to stay away from the main circuit wiring.

※ If the carrier frequency is less than 3KHz, the maximum distance between the inverter and the motor should be within 50 meters; if the carrier frequency is greater than 4KHz, the distance should be reduced appropriately, it is best to lay the wiring inside metal tube.

※ When the inverter is additionally equipped with peripherals (filter, reactor, etc.), firstly measure its insulation resistance to ground by using 1000 volt megger, so as to ensure the measured value is no less than 4 megohms.

※ When the inverter need to be started frequently, do not directly turn power off, only the control terminal or keyboard or RS485 operation command can be used to control the start/stop operation, in order to avoid damage to the rectifier bridge.

※ Do not connect the AC input power to the inverter output terminals (U, V, W) .

※ To prevent the occurrence of an accident,the ground terminal (⏚) must be earthed firmly (grounding impedance should be less than 10 ohms), otherwise the leakage current will occur.

※ The specifications on wires used by the main circuit wiring shall comply with the relevant provisions of the National Electrical Code.

※ The motor's capacity should be equal to or less than the inverter's capacity.

8-7.Spare Circuit

When the inverter occurs the fault or trip, which will cause a larger loss of downtime or other unexpected faults. In order to avoid this case from happening, please additionally install spare circuit to ensure safety.

Note: the characteristics of spare circuit must be confirmed and tested beforehand,and its power-frequency shall be in accordance with the phase sequence of the inverter.

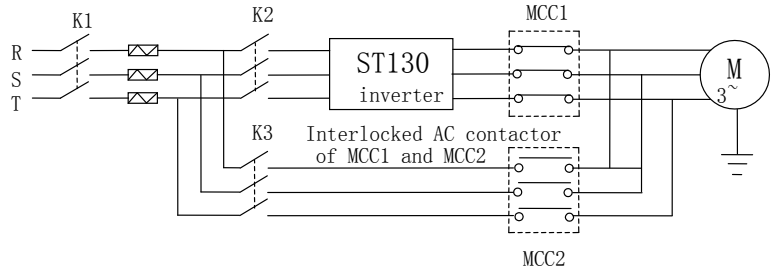
K1
K2
MCC1
R
S
T
ST130
inverter
M
3~
K3
Interlocked AC contactor
of MCC1 and MCC2
MCC2

Chapter 9 Maintenance and Repair

9-1.Inspection and Maintenance

During normal use of the inverter, in addition to routine inspections, the regular inspections are required (e.g. the overhaul or the specified interval, and the interval shall not exceed 6 months),please refer to the following table to implement the preventive measures.

Check Date		Check Points	Check Items	Check to be done	Method	Criterion
Routine	Regular					
√		Display	LED/OLED display	Whether display is abnormal or not	Visually check	As per use status
√	√	Cooling system	Fan	Whether abnormal noise or vibration exists or not	Visually and audibly check	No abnormal
√		Body	Surrounding conditions	Temperature, humidity, dust, and harmful gases	Visually check with smelling and feeling	As per Section 2-1
√		Input/output terminals	Voltage	Inputs, output voltage is abnormal	Test R, S, T and U, V, W terminals	As per standard specifications
	√	Main circuit	Overall	Whether these phenomenon of loose fastenings, overheat, discharging, much dust, or blocked air duct exist or not	Visually check, tighten and clean	No abnormal

			Electrolytic capacitance	Whether appearance is abnormal or not	Visually check	No abnormal
			Wire conductive row	Whether they are loose or not	Visually check	No abnormal
			Terminals	If screws or bolts are loose or not	Tighten	No abnormal

"√" means routine or regular check to be needed

Do not disassemble or shake the device gratuitously during check, and never unplug the connectors, otherwise the system will not run or will enter into fault state and lead to component failure or even damage to the main switching device such as IGBT module.

The different instruments may come to different measurement results when measuring. It is recommended that the pointer voltmeter shall be used for measuring input voltage, the rectifier voltmeter for output voltage, the clamp-on ammeter for input current and output current, and the electric wattmeter for power.

9-2.Parts for regular replacement

To ensure the reliable operation of inverter, in addition to regular care and maintenance, some internal mechanical wear parts (including cooling fan, filtering capacitor of main circuit for energy storage and exchange, and printed circuit board) shall be regularly replaced. Use and replacement for such parts shall follow the provisions of below table, also depend on the specific application environment, load and current status of inverter.

Name of Parts	Standard life time
Cooling fan	1 to 3 years
Filter capacitor	4 to 5 years
Printed circuit	5 to 8 years

9-3.Storage

The following actions must be taken if the inverter is not put into use immediately (temporary or long-term storage) after purchasing:

※ It should be stored at a well-ventilated site without damp, dust or metal dust, and the ambient temperature complies with the range stipulated by standard specification

※ If the time that the inverter is set aside exceeds one year, a charge test should be made so as to resume the performance of the filtering capacitor of main circuit. When charging, the voltage regulator can be used to slowly rise input voltage of the inverter until the rated input voltage, the charging time is 1 to 2 hours or more. The above test shall be performed at least once a year.

※ Voltage withstand test can not be arbitrarily implemented, it will reduce the life of inverter. Insulation test can be made with the 500-volt megger before using, the insulation resistance shall not be less than 4MΩ.

9-4.Measuring and readings

※ If a general instrument is used to measure current,imbalance will exists for the current at the input terminal. generally, the deviation is not more than 10%, that is normal. If the deviation exceeds 30%, please inform the original manufacturer to replace rectifier bridge, or check if the deviation of three-phase input voltage is above 5V or not.

If a general multi-meter is used to measure three-phase output voltage, the reading is not accurate due to the interference of carrier frequency and it is only for reference.

Chapter 10 Warranty

The warranty of this product follows the following provisions:

1.The warranty that liabilities shall be beared by the manufacturer:

1-1. For use at home (subject to date of shipment)

※ The refunding, replacement and repair are guaranteed within one (1) month after the shipment.

※ The replacement and repair are guaranteed within three (3) months after the shipment.

※ The repair is guaranteed within twelve (12) months after the shipment.

1-2.For use at abroad (excluding domestic), the repair is guaranteed at the place of purchase within six (6) months after the shipment.

2. Whenever and wherever you use our brand of products,you can enjoy a paid service for life.

3.Our distributors, manufacturers and agencies across the country can provide after-sales service of this product, the conditions of service are:

3-1. The service of inspection is provided locally at a inspection standard of level 3.

3-2. All services shall comply with the related after-sale service terms and conditions stated on theagency agreement between Sourcetronic and distributors.

3-3. A paid after-sale service from distributors or agencies of Sourcetronic (whether or not within warranty period) can be requested.

4. We only bear the above terms 1-1 or 1-2 at most regarding to the responsibility of product quality or incidents. if users need more liability guarantee, please apply for insurance company in advance to insure your own property safety.

5. The warranty period of this product is one year from the date of shipment.

6. The failure caused by following causes will even during the warranty period, their repair will be charged too:

6-1.Incorrect operation (subject to the user manual) or unauthorized repair or renovation.

6-2.Non-following standard specification to use the inverter.

6-3.Drop or improper carry after purchase.

6-4.Aging or failure caused by the adverse environmental.

6-5.Damage caused by earthquake, fire, wind and water disasters, lightning, abnormal voltage or othernatural disasters and accompanied disasters.

6-6.Damage during transport (Note: The mode of transport is specified by the customer, this company can assist customer to transfer goods) .

6-7.The brand, trademark, serial number, nameplate labeled by the manufacturer are damaged or illegible.

6-8.The full money for this product has not been paid up according to purchase agreement

6-9.The actual situation for installation, wiring, operation, maintenance or other

uses could not be objectively reported to the service department of this company.

7. The refunding, replacement or repair only can be performed after the defective product is returned to this company and its responsible party is confirmed.

Appendix I RS485 Communication Protocol

I-1.Introduction

ST130 series inverter provides RS232/RS485 communication interface, uses international standard MODBUS communication protocol for the master-slave communication. User can use PC/PLC to control the host computer etc so as to achieve the centralized control (setting control command operating frequency of the inverter, modifying the relevant function code parameters, monitoring the inverter's operating status and fault message) to meet specific application requirements .

I-2.Details

1. Protocol content

This serial communication protocol defines the transmission information and use format in the series communication Including: master polling (or broadcast) format; master encoding method, and contents including: function code of action, transferring data and error checking. The response of slave also adopts the same structure, and contents including: action confirmation, returning the data and error checking etc. If slave takes place the error while it is receiving information or cannot finish the action demanded by master, it will send one fault signal to master as a response.

2. Application Method

The inverter will be connected into a “Single-master Multi-slave” PC/PLC control network with RS232/RS485 bus.

3. Bus structure

(1) Interface mode: RS232/RS485 hardware interface

(2) Transmission mode

Asynchronous series and half-duplex transmission mode. For master and slave,only one of them can send the data and the other only receives the data at the same time. In the series asynchronous communication, the data is sent out frame by frame in the form of message

(3) Topological structure

Single-master and multi-slave system. The setting range of slave address is 1 to 247,and 0 refers to broadcast communication address. The address of slave for network must be exclusive. As shown below:

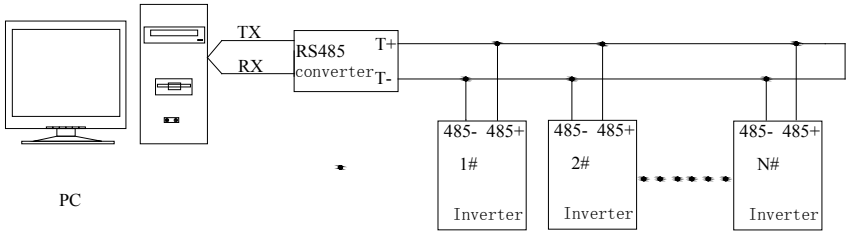

Note: becasue the terminal resistors is designed on the control board, 485 communication is not required for connecting external terminal resistors.

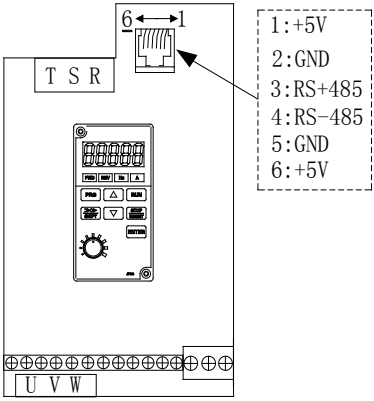

4. Protocol description

ST130 series inverter communication protocol is a asynchronous serial master-slave communication protocol, in the network, only one equipment (master) can build a protocol (known as “Inquiry/Command”) . Other equipment (slave) only can response the "Inquiry/Command"of master by providing data or perform the corresponding action according to the "Inquiry/Command"of master. Here, the master refers to a Personnel Computer (PC), an industrial control device or a programmable logic controller (PLC),etc. and the slave refers to ST130 inverter. Master can communicate with individual slave, also send broadcasting information to all the lower slaves. For the single "Inquiry/Command"of master, slave will return a signal (that is a response) to master; for the broadcasting information sent by master, slave does not need to feedback a response to master.

5. Communication data structure

MODBUS protocol communication data format of ST130 series Inverter is divided into RTU (remote terminal unit) mode

and ASCII (American Standard Code for Information International Interchange) mode.

(1) In RTU mode, each byte format is as follows:
in RTU mode, messages are sent at a silent interval of at least 3.5 characters. There are diverse character intervals under network baud rate,which is easiest implemented (as shown in Figure T1-T2-T3-T4) . The first field transmitted is the device address. The allowable characters for transmitting are hexadecimal 0 ... 9, A ... F. The networked devices continuously monitor network bus, including during the silent intervals. When the first field (the address field) is received, each device decodes it to find out if it is sent to their own. Following the last transmitted character, a silent interval of at least 3.5 characters marks the end of the message. A new message can begin after this silent interval. The entire message frame must be transmitted as a continuous stream. If a silent interval of more than 1.5 characters occurs before completion of the frame, the receiving device will flushes the incomplete message and assumes that the next byte

will be the address field of a new message. Similarly, if a new message begins earlier than the interval of 3.5 characters following a previous message, the receiving device will consider it as a continuation of the previous message. This will result in an error, because the value in the final CRC field is not right.

RTU frame format:

Frame header START	T1-T2-T3-T4 (transmission time of 3.5-byte)
Slave address field ADDR	Address: 0 to 247 (decimal) (0 is the broadcast address)
Functional field CMD	03H: read slave parameters; 06H: write slave parameters
Data field DATA (N-1) … DATA (0)	2*N bytes of data, the part is the main contents of communications, but also the data exchange core during communicating.
CRC CHK low-order	Detection value: CRC checksum (16BIT)
CRC CHK high-order	
Frame tail END	T1-T2-T3-T4 (transmission time of 3.5-byte)

(2) In ASCII mode, each byte format is as follows:

In ASCII mode, the frame header is ":" ("0x3A"), the default frame tail is "CRLF" ("0x0D" "0x0A") . In ASCII mode, in addition to header and trailer, the rest of all data bytes are sent in ASCII code, firstly sent the high 4 bytes, and then send the low 4 bytes. In ASCII mode, the length of data is eight bytes. For 'A' to 'F', the uppercase ASCII code is adopted. At this point the data adopts LRC parity, the parity covers slave's address and data. The sum of parity is equal to the complement of the character sum (discard the carry bit) of all data to be checked.

ASCII frame standard structure:

START	‘:’ (0x3A)
Address Hi	Address :8-bit address consists of 2 ASCII codes
Address Lo	
Function Hi	Function code :8-bit address consists of 2 ASCII codes
Function Lo	
DATA (N-1) … DATA (0)	Data Content: nx8-bit data consists of 2n combinations of ASCII code n <= 16, maximum 32 ASCII codes
LRC CHK Hi	LRC check code: 8-bit check code consists of 2 ASCII codes
LRC CHK Lo	
END Hi	Terminator: END Hi = CR (0x0D), END Lo = LF (0x0A)

CMD (Command) and DATA (Data word description) command code: 03H, read N words (Word) (up to 16 words can be read), such as: the starting address 0001 of inverter with slave address 01, which continuously read 2 consecutive messages of RTU master command .

START	T1-T2-T3-T4
ADDR	01H

CMD	03H
Start address high-order	F0H
Start address low-order	01H
Data number high-order	00H
Data number low-order	02H
CRC CHK low-order	CRC CHK values are to be calculated
CRC CHK high-order	
END	T1-T2-T3-T4

RTU slave responding information

F9.05 is set to 0: (newly added non-standard MODBUS protocol)

START	T1-T2-T3-T4
ADDR	01H
CMD	03H
Byte number low-order	00H
Byte number high-order	04H
Data address 0001H high-order	13H
Data address 0001H low-order	88H
Data address 0002H high-order	00H
Data address 0002H low-order	00H
CRC CHK low-order	CRC CHK values are to be calculated
CRC CHK high-order	
END	T1-T2-T3-T4

When F9.05 is set to 1:

START	T1-T2-T3-T4
ADDR	01H
CMD	03H
Byte number	04H
Data address 0001H high-order	13H
Data address 0001H low-order	88H
Data address 0002H high-order	00H
Data address 0002H low-order	00H
CRC CHK low-order	CRC CHK values are to be calculated
CRC CHK high-order	
END	T1-T2-T3-T4

ASCII master command information

START	‘:’
ADDR	‘0’
	‘1’
CMD	‘0’
	‘3’
Start address high-order	‘0’
	‘0’
Start address low-order	‘0’
	‘4’
Data number high-order	‘0’
	‘0’
Data number low-order	‘0’
	‘2’
LRC CHK Hi	‘F’
LRC CHK Lo	‘6’
END Hi	CR
END Lo	LF

ASCII slave responding information

START	‘:’
ADDR	‘0’
	‘1’
CMD	‘0’
	‘3’
Byte number	‘0’
	‘4’
Data address 0004H high-order	‘1’
	‘3’
Data address 0004H low-order	‘8’
	‘8’
Data address 0005H high-order	‘1’
	‘3’
Data address 0005H	‘8’

low-order	‘8’
LRC CHK Hi	‘C’
LRC CHK Lo	‘2’
END Hi	CR
END Lo	LF

Parity mode - CRC mode: CRC (Cyclical Redundancy Check)

Use RTU frame format, the message includes error check field based on the CRC method. The CRC field checks the whole content of message. The CRC field has two bytes containing a 16-bit binary value. The CRC value calculated by the transmitting device will be added into to the message. The receiving device recalculates the value of the received CRC, and compares the calculated value to the actual value of the received CRC field, if the two values are not equal,then there is an error in the transmission.

The CRC firstly stores 0xFFFF and then calls for a process to deal with the successive eight-bit bytes in message and the value of the current register. Only the 8-bit data in each character is valid to the CRC,the start bit and stop bit, and parity bit are invalid. During generation of the CRC, each eight-bit character is exclusive OR (XOR) with the register contents separately, the result moves to the direction of least significant bit (LSB), and the most significant bit (MSB) is filled with 0. LSB will be picked up for detection, if LSB is 1, the register will be XOR with the preset value separately, if LSB is 0, then no XOR takes place. The whole process is repeated eight times. After the last bit (eighth) is completed, the next
eight-bit byte will be XOR with the register's current value separately again. The final value of the register is the CRC value that all the bytes of the message have been applied.

When the CRC is appended to the message, the low byte is appended firstly, followed by the high byte. CRC simple functions is as follows:

```
unsigned int crc_chk_value（unsigned char *data_value,unsigned char length）
{
    unsigned int crc_value=0xFFFF;
     int i;
     while（length--）
     {
        crc_value^=*data_value++;
          for（i=0;i<8;i++）
          {
              if（crc_value&0x0001）
               {
                 crc_value=（crc_value>>1）^0xa001;
               }
              else
               {
```

```
                    crc_value=crc_value>>1;
                }
            }
        }
        return（crc_value）;
    }
```

Definition of communication parameter address

The section is about communication contents, it's used to control the operation, status and related parameter settings of the inverter. Read and write function-code parameters (Some functional code is not changed, only for the manufacturer use or monitoring) : the rules of labeling function code parameters address:

The group number and label number of function code is used to indicate the parameter address:

High byte: F0 to FB (F group), A0 to AF (E group), B0 to BF (B group), C0 to C7 (Y group), 70 to 7F (d group), low byte: 00 to FF

For example: address F3.01 indicates F301;

Note: L0 group parameters: neither read nor change; d group parameters: only read, not change.

Some parameters can not be changed during operation, but some parameters can not be changed regardless of the inverter is in what state.When changing the function code parameters, please pay attention to the scope, units, and relative instructions on the parameter.

Besides, due to EEPROM is frequently stored, it will reduce the life of EEPROM, therefore under the communication mode some function code do not need to be stored and you just change the RAM value.

If F group parameters need to achieve the function, as long as change high order F of the function code address to 0. If E group parameters need to achieve the function, as long as change high order F of the function code address to 4. The corresponding function code addresses are indicated below: high byte: 00 to 0F (F group), 40 to 4F (E group), 50 to 5F (B group), 60 to 67 (Y group), low byte:00 to FF

For example:

Function code F3.01 can not be stored into EEPROM, address indicates as 0301; function code E3.05 can not be stored into EEPROM, address indicates as 4305; the address indicates that only writing RAM can be done and reading can not be done, when reading, it is invalid address. For all parameters, you can also use the command code 07H to achieve the function.

Stop/Run parameters section:

Parameter address	Parameter description
1000H	*Communication set value (-10000 to 10000) (Decimal)
1001H	Set speed
1002H	Bus voltage

1003H	Output voltage
1004H	Output current
1005H	Output power
1006H	Output torque
1007H	Running speed
1008H	Terminal input flag status
1009H	Terminal output flag status
100AH	Analog AI1 value
100BH	Analog AI2 value
100CH	Reserved
100DH	Reserved
100EH	Reserved
100FH	Reserved
1010H	STD setting value
1011H	STD feedback value
1012H	Current stage of multi-speed PLC
1013H	Reserved
1014H	Reserved
1015H	Torque direction (0: forward, 1: Reverse)
1016H	Device code

The set value is the percentage of the relative value, 10000 corresponds to 100.00%, -10000 corresponds to -100.00%.

For frequency dimension data,it is the percentage of the maximum output frequency (F0.08) ; for torque dimension data, the percentage is F5.07 (torque upper limit digital setting) .

Control command is input to the inverter: (write only)

Command word address	Command function
2000H	0001H: Forward run
	0002H: Reverse run
	0003H: Forward Jog
	0004H: Reverse Jog
	0005H: Free stop (emergency stop)
	0006H: Stop
	0007H: Fault reset
	0008H: Jog Stop

Inverter read status: (read-only)

Status word address	Status word function
3000H	0001H: Forward running

	0002H: Reverse running
	0003H: Inverter is in standby
	0004H: Fault is happening

Parameter lock password verification: (If the return code is8888H, it indicates that password verification is passed)

Password address	Enter password
1F00H	*****

Parameter lock command: (write only)

Lock password command address	Lock password command content
1F01H	55AAH

Digital output terminal control: (write only)

Inverter fault description:

Inverter fault address:	Fault code	Inverter fault information:
8000H		0000: No fault
	E.oUP	0001: Inverter unit U-phase
	E.oUP	0002: Inverter unit V-phase
	E.oUP	0003: Inverter unit W-phase
	E.oC1	0004: Acceleration overcurrent
	E.oC2	0005: Deceleration overcurrent
	E.oC3	0006: Constant speed overcurrent
	E.oU1	0007: Acceleration overvoltage
	E.oU2	0008: Deceleration overvoltage
	E.oU3	0009: Constant speed overvoltage
	E.LU	000A: Bus undervoltage fault
	E.oL1	000B: Motor Overload
	E.oL2	000C: Inverter overload
	Reserved	
	Reserved	
	Reserved	
	E.oH2	0011: Inverter module overheating fault
	E.SET	0012: External fault
	E.CE	0013: Communication fault
	E.oCC	0014: Current detection fault
	E.TE	0015: Motor auto tunning fault
	E.EEP	0016: EEPROM operation fault
	E.STd	0017: STD disconnection fault
	Reserved	
	END	Reserved

Data on communication failure information description (fault code) :

Communication fault message (fault code) : when the slave device responds, function code field and fault address are used to indicate whether it is a normal response (correct) or an error (called exception response) . If it is the normal response, the slave device will respond corresponding function code and data address or sub-function code. If it is the exception response, the slave device returns a code equivalent to the normal

code, but the first position is the logic 1.

For example: a message sent from one master device to one slave device is required to read a set of inverter function code address data, it will produce the following function code: 00000011 (hexadecimal 03H), for the normal response, the slave device will respond the same function code. For the exception response, it returns: 10000011 (hexadecimal 83H) . In addition to the modification to function code for exception, the slave device will respond to a byte of exception code, which defines the reason for exception occurrence.

When the application program of master device gets a exception response, the typical handling process is to resend the message, or change corresponding fault command.

MODBUS Exception Code Table

MODBUS exception code		
Code	Name	Explanations
01H	Password error	The password written into by the password authentication address is different from the password set by user (y0.01) .
02H	Illegal data address	The request data address of host computer is disallowed; particular, the combination of register address and number of bytes transferred are invalid.
03H	Authentication error	When the CRC check bit of RTU format or the LRC check bit of ASCII format in the message sent from by host computer is different from the value sent by auxiliary computer, the authentication error message will be reported.
04H	Illegal function	When the received function code from the host computer is a disallowed operation; the slave in the wrong state may deal with such requests too.
05H	Illegal data value	When the received data field includes in the disallowed values. Note: it does not mean the register data item to be stored includes an value unexpected by application.
06H	Invalid parameter changes	In the write command parameter sent by the host computer, it includes data outside the scope of the parameter or the current state of write address is not available.
07H	System locked	When the host computer performs read or write command, if use has set password and unlocked the password, it will report that the system is locked.
08H	Auxiliary device busy	The inverter is busy (EPPROM is saving)

Warranty Card

Sincerely thank you purchase Sourcetronic products !

This product has passed the strict quality inspection by Sourcetronic. According to the instructions of this warranty card, Sourcetronic will be responsible for free maintenance for all hardware failures caused by product quality problem under normal use during the warranty period.

Product Model:	Serial Number:		
Warranty period:			
Date of purchase:	Year	Month	Day
Invoice Number:			
User Name: (Or company name)			
Address:			
Zip:	Phone:	Fax:	
Dealer Name:			
Address:			
Zip:	Phone:	Fax:	
Dealer stamp			

Customer Feedback Form of Sourcetronic Inverter Failure

Dear Customer: please fill out the form below in details so that we may better serve you:

Load and control situation					
Electrical power and poles		Rated motor current		Frequency range under normal working	
Load type	☐Fan☐Textile machine☐Extruder ☐Pump☐Injection machine☐Other load		Speed control mode	☐Keyboard ☐Terminal ☐STD ☐Host computer	
Control method	☐V/F control ☐Vector control without PG				
Failure phenomenon					
When failure occurs	☐power-on ☐start run ☐in operation ☐accelerate ☐decelerate				
Failure type					
Abnormal current	☐E.oC1 ☐E. oC2 ☐E. oC3				
Abnormal voltage	☐E. oU1 ☐E.oU2 ☐E.oU3 ☐E.LU				
Other display failure	☐E.oH2 ☐E.SET ☐E.EEP ☐E.STd				
Board failure	☐no display after power on ☐smoking after power on ☐power board relay does not pull-in				
Keyboard failure	☐button malfunction ☐parameter can not be modified ☐imperfect display ☐knob malfunction				
Device failure	☐burnt ☐fan does not work ☐main circuit relay or contactor does not pull-in ☐power resistors burned out				

Abnormal output	☐no output voltage ☐output voltage unbalance ☐motor with large vibrations ☐motor power inadequate
If your failure is not listed above, Please describe in the following:	
Failure description:	

The following fields shall be filled out by maintenance agency

Maintenance records:

1st time	Full name of maintenance agency			
	Address			
	Zip Code		Maintenance voucher number	
	Tel		Repairer's signature	
2nd time	Full name of maintenance agency			
	Address			
	Zip Code		Maintenance voucher number	
	Tel		Repairer's signature	

3rd time	Full name of maintenance agency			
	Address			
	Zip Code		Maintenance voucher number	
	Tel		Repairer's signature	

Product Information Feedback

Dear user:

Thank you for your interest in and purchasing Sourcetronic products! In order to better serve you, we want to be able to timely get your personal information and the related information of the purchased Sourcetronic products so as to understand your current and future further demand to Sourcetronic products, we would appreciate your valuable feedback. For your convenience,please visit our websiteHttP://www.sourcetronic.com and then click "Technologies and Services"and "Download" columns to submit your feedback information.

1) Download the update product manuals you need
2) View the technical information on products, such as operation instructions,specifications and features, FAQ,etc.
3) Share application cases.
4) Technical advisory and online feedback
5) Feedback the product and demand information for via e-mail
6) Inquire the latest products and access to various types of warranty and extend additional services